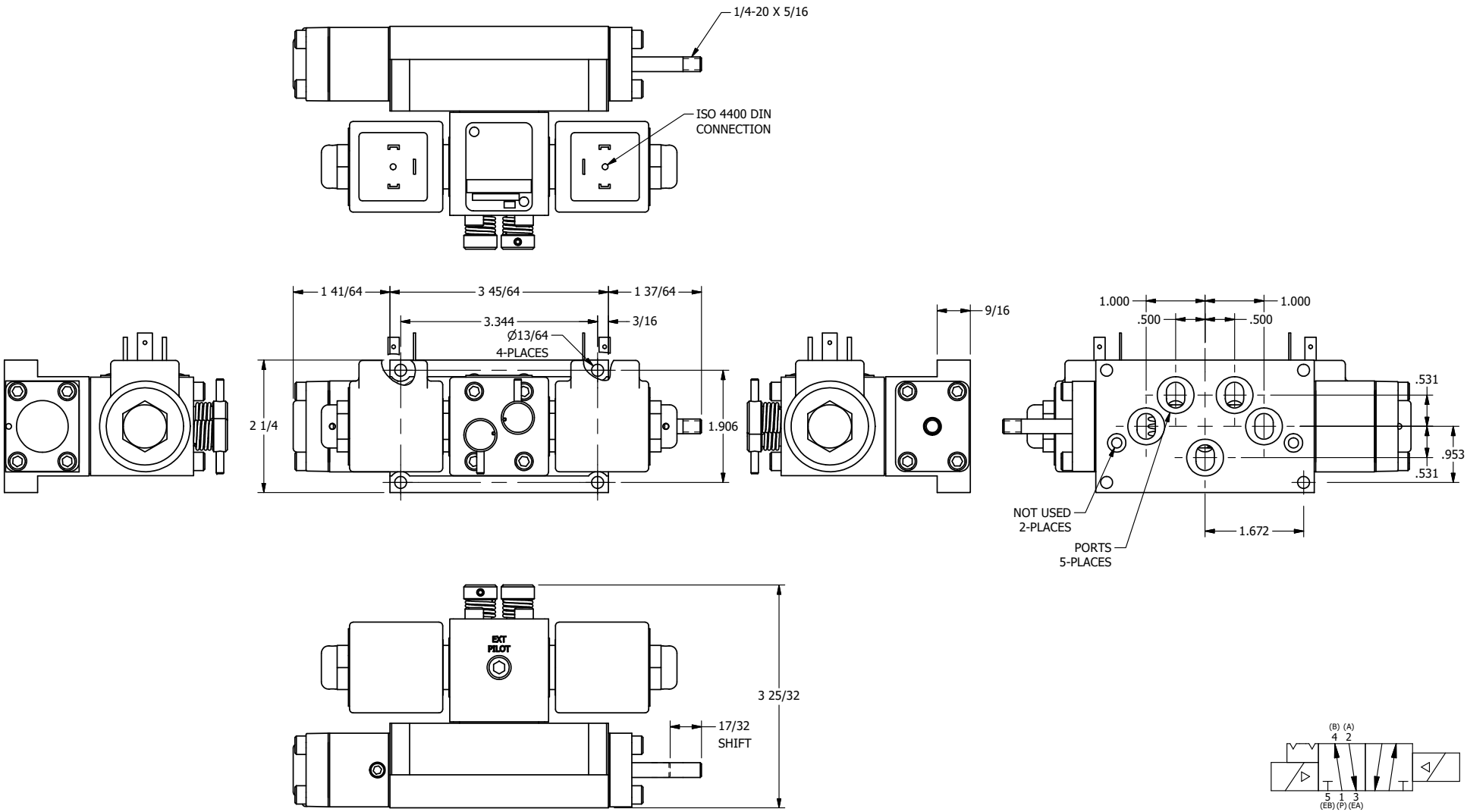

AAA PRODUCTS INTERNATIONAL
7114 Harry Hines Blvd
Dallas, TX 75235

TITLE: 3/8" SUBPLATE,DBL SOL, 2 POS, DTNT, SOL RTRN, ISO 4400, N-LCKNG OVRD, EXCLDR, INDCTR PIN

DRAWING NO.: DIM_SS3PEDONLKQ

THE INFORMATION CONTAINED WITHIN THIS DOCUMENT IS PROPRIETARY TO AAA PRODUCTS AND MAY NOT BE DISCLOSED WITHOUT PRIOR WRITTEN CONSENT