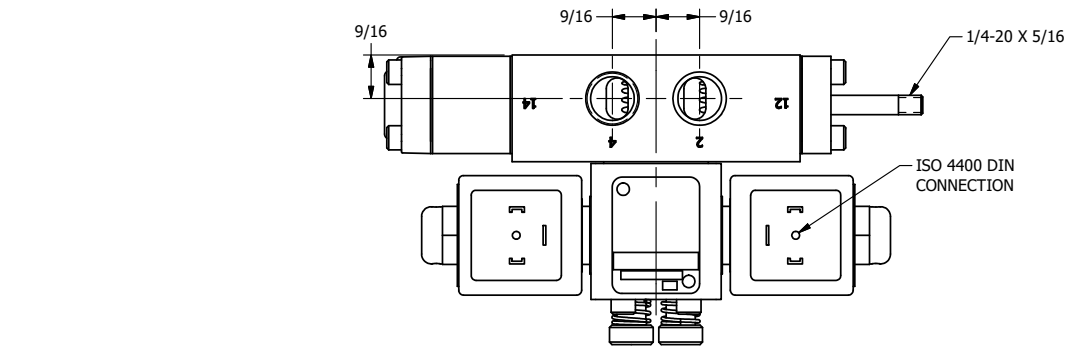

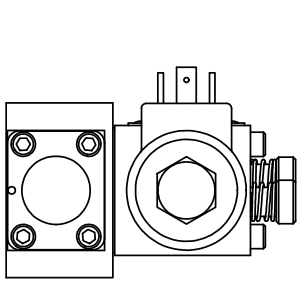

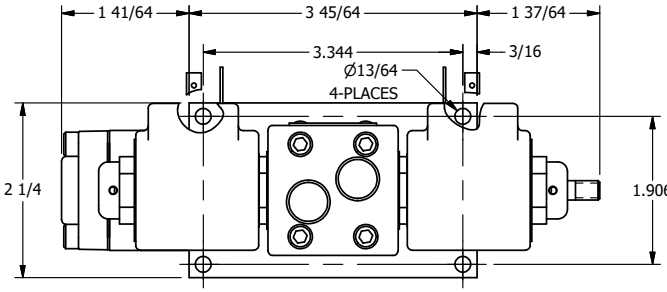

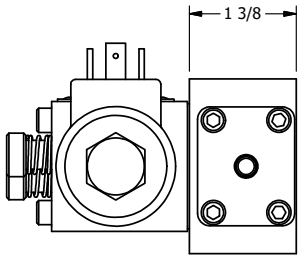

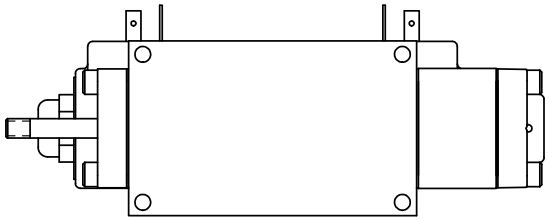

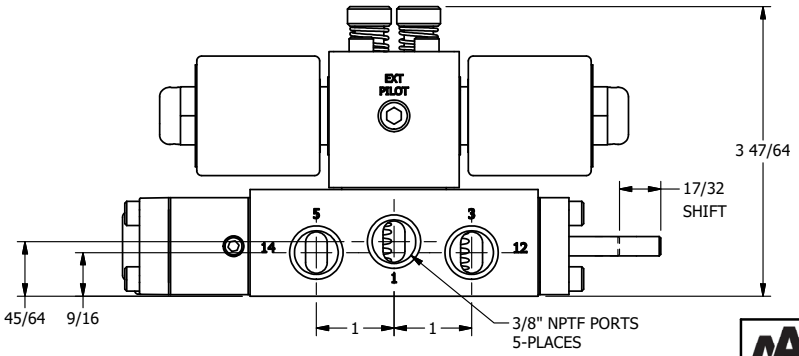

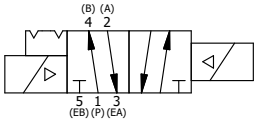

AAA PRODUCTS INTERNATIONAL
7114 Harry Hines Blvd
Dallas, TX 75235

TITLE: 3/8" SIDE PORT, DBL SOL, 2 POS, DTNT, SOL RTRN, ISO 4400, PUSH OVRD, EXCLDR, INDCTR PIN

DRAWING NO.: DIM_SS3EDOPLKQ

THE INFORMATION CONTAINED WITHIN THIS DOCUMENT IS PROPRIETARY TO AAA PRODUCTS AND MAY NOT BE DISCLOSED WITHOUT PRIOR WRITTEN CONSENT