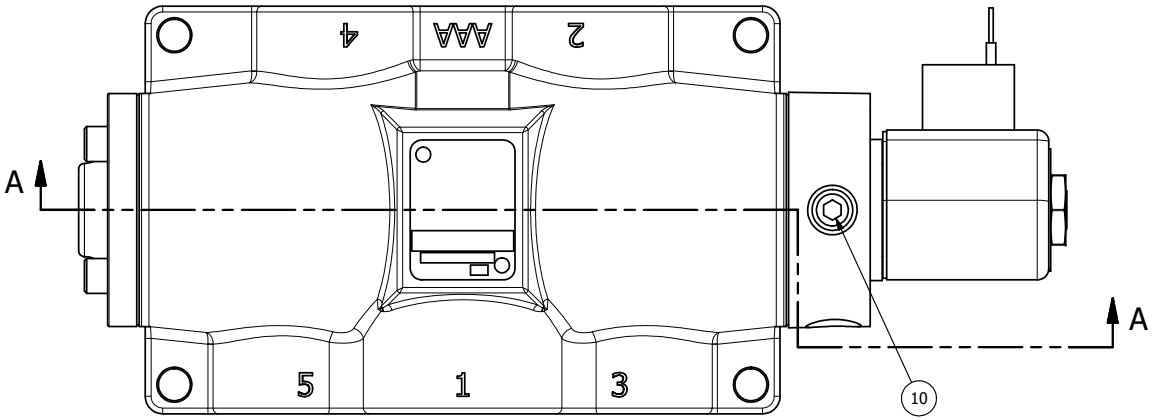

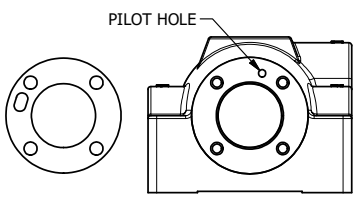

POSITION GASKET ON END OF VALVE SO GASKET COVERS PILOT HOLE, SIDE 'B' ONLY

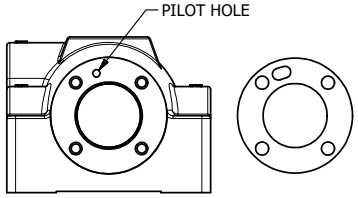

ALIGN PILOT AND HOLE IN GASKET, SIDE 'A' ONLY FOR EXTERNAL PILOT OPERATION - ROTATE THE ROUND ALUMINUM ADAPTOR 90 OR 180 DEGREES. REMOVE 1/8" NPTF PLUG AND SUPPLY 50-160 PSI TO 1/8" NPTF PILOT PORT IN ADAPTOR.

NOTES:
1) ALWAYS GIVE VALVE MODEL AND PART NUMBER WHEN ORDERING PARTS.
2) FOR DIFFERENT VOLTAGES OTHER THAN 120/60, REPLACE SOLENOID OPERATOR WITH OPERATOR LISTED IN TABLE BELOW. REFERENCE AY-38 DRAWING FOR REPLACEMENT COILS.

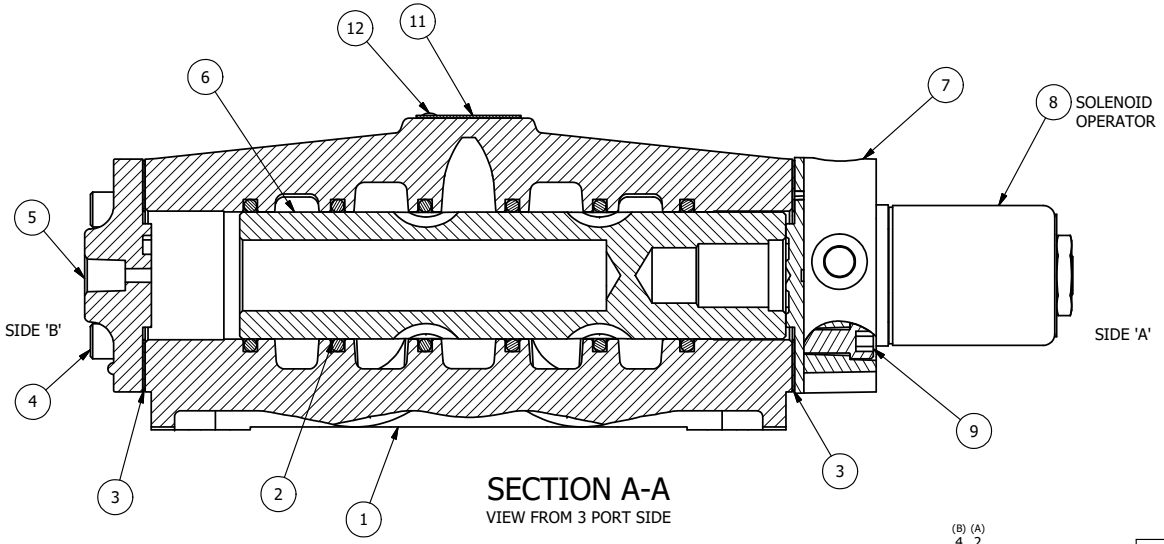

SECTION A-A
VIEW FROM 3 PORT SIDE

FLG	QTY	PART NO	DESCRIPTION
12	2	V-212	SCREW, #2 X 3/16 DRIVE, TYPE U, OVAL HEAD, STAINLESS STEEL
11	1	AN-115	NAMEPLATE, BLANK, FOR HE,KE,KD,RR,D,CR,PP,SR,SS VALVES
10	1	V-19	PLUG, SOCKET PIPE 1/8" NPT (#601-3 PITTSBURG PLUG PART #.)
9	4	V-47	SCREW, 1/4-20 X 1, SOCKET HEAD CAP
8	1	AY-38-11	CLASSIC SOLENOID - STANDARD, COMPLETE OPERATOR, 120/60
7	1	SSA48	ADAPTOR, SOLENOID, 1/2", 3/4" & 1" VALVE
6	1	S8	SPOOL - STANDARD, 2 POS, CLSD CTR, 3/4" & 1" VALVE
5	1	PEC48	END CAP, PILOT, 380 AL, 1/2", 3/4" & 1" VALVES
4	4	V-46	SCREW, 1/4-20 X 3/4, SOCKET HEAD CAP
3	2	ECG48	GASKET - END CAP, 1/2", 3/4" & 1" VALVE
2	6	V-30	O-RING, BUNA-N, 70 DURO, AS-220, (REF 1-3/8 X 1-5/8 X 1/8), 3/4" & 1" VALVES
1	1	B8-1	BODY, 1" SIDE PORT, UPPER PILOTS, ANODIZED

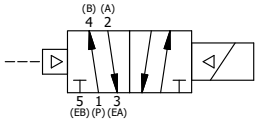

OPERATOR VOLTAGES	
PART NO	REPLACE OPERATOR
SR8 240/60	AY-38-17
SR8 24VDC	AY-38-8
SR8 12VDC	AY-38-5

LIMITS ON DIMENSIONS UNLESS OTHERWISE SPECIFIED
2-PL DECIMAL ± .01
3-PL DECIMAL ± .005
FRACTIONAL ± 1/64
ANGULAR ± 1/2'

AAA PRODUCTS INTERNATIONAL
7114 Harry Hines Blvd
Dallas, TX 75235

DRAWN: RMcKenna DATE: 2/19/2006
CHECKED: KWaite DATE: 5/30/2015
SCALE: 3/4 SHEET: 1 OF 1
RELEASED: HWomack DATE: 5/30/2015

TITLE: 1" SIDE PORT, SNGL SOL, 2 POS, FRICTION POS, PILOT RTRN, CLASSIC SOL, 120/60

PART NO.: SR8

REV.:

THE INFORMATION CONTAINED WITHIN THIS DOCUMENT IS PROPRIETARY TO AAA PRODUCTS AND MAY NOT BE DISCLOSED WITHOUT PRIOR WRITTEN CONSENT

D:\Engineering\Product\Valve\Assembly\Classic\SR8\Vol\SR8.dwg