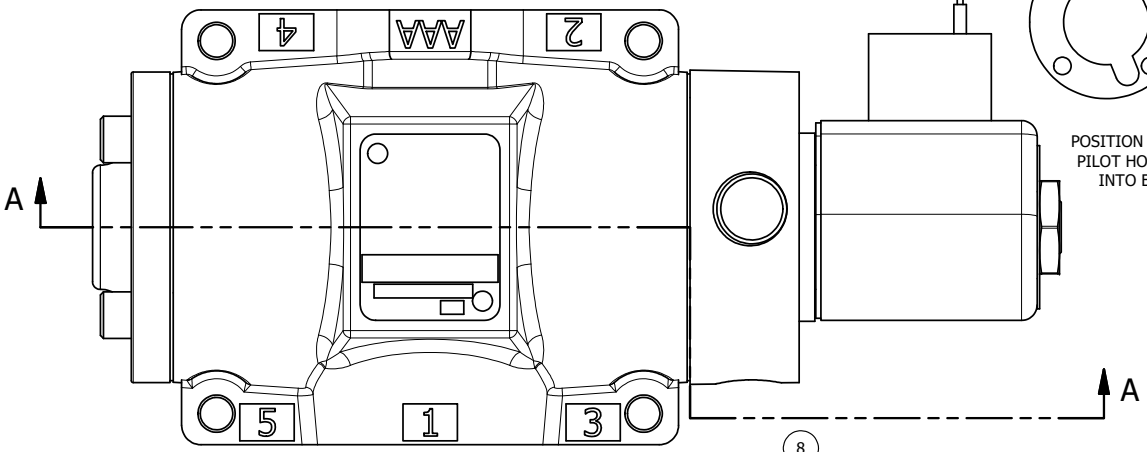

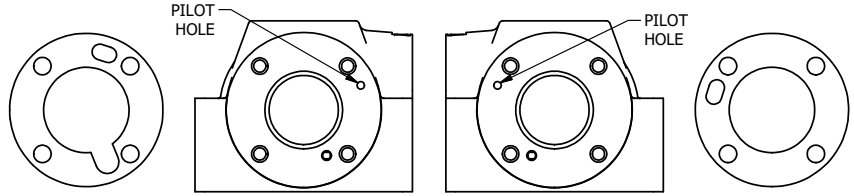

POSITION ECG48-1 GASKET TO SEAL UPPER PILOT HOLE, AND OPENING LOWER PILOT INTO END OF VALVE. SIDE 'B' ONLY.

ALIGN PILOT AND HOLE IN ECG48 GASKET, SIDE A ONLY FOR EXTERNAL PILOT OPERATION - ROTATE THE ROUND ALUMINUM ADAPTOR 180 DEGREES. REMOVE 1/8" NPTF PLUG AND SUPPLY 50-160 PSI TO 1/8" NPTF PILOT PORT IN ADAPTOR.

NOTES:
1) ALWAYS GIVE VALVE MODEL AND PART NUMBER WHEN ORDERING PARTS.
2) FOR DIFFERENT VOLTAGES OTHER THAN 120/60, REPLACE SOLENOID OPERATOR WITH OPERATOR LISTED IN TABLE BELOW. REFERENCE AY-38 DRAWING FOR REPLACEMENT COILS.

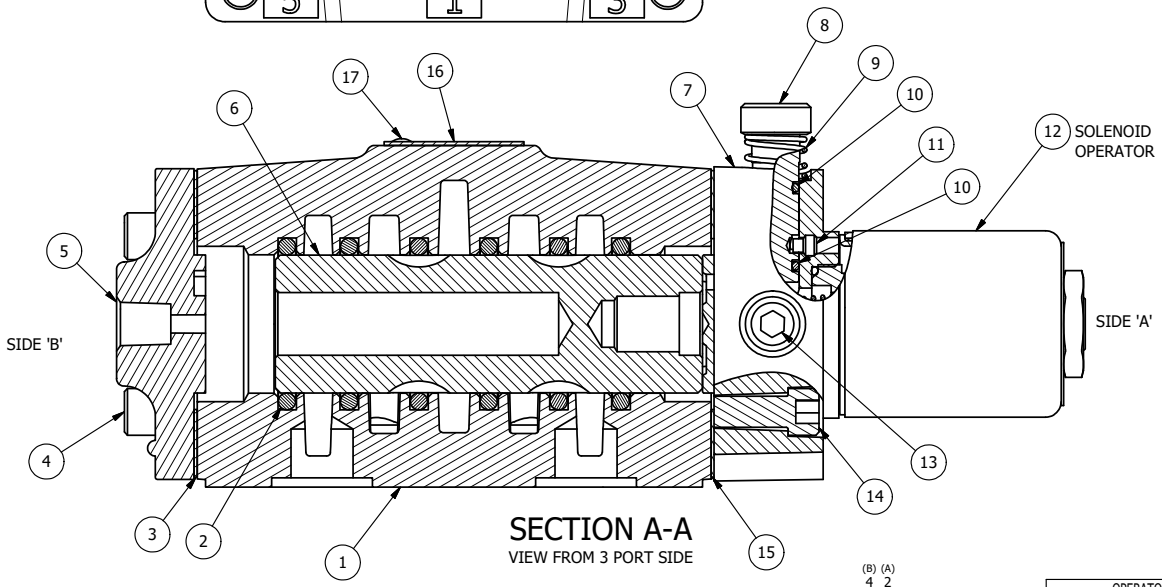

SECTION A-A
VIEW FROM 3 PORT SIDE

FLG	QTY	PART NO	DESCRIPTION
18	1	SPK-4	KIT - SUBPLATE MOUNT, 1/2" SUBPLATE VALVES
17	2	V-212	SCREW, #2 X 3/16 DRIVE, TYPE U, OVAL HEAD, STAINLESS STEEL
16	1	AN-115	NAMEPLATE, BLANK, FOR HE,KE,KD,RR,D,CR,PP,SR,SS VALVES
15	1	ECG48	GASKET - END CAP, 1/2", 3/4" & 1" VALVE
14	4	V-47	SCREW, 1/4-20 X 1, SOCKET HEAD CAP
13	1	V-19	PLUG, SOCKET PIPE 1/8" NPT (#601-3 PITTSBURG PLUG PART #.)
12	1	AY-38-11	CLASSIC SOLENOID - STANDARD, COMPLETE OPERATOR, 120/60
11	1	V-81	SCREW, 8-32 X 5/16, SOCKET SET, FULL DOG POINT
10	2	V-85	O-RING, BUNA-N, 70 DURO, AS-010, (REF 1/4 X 3/8 X 1/16), CLASSIC OVRD
9	1	OS3	SPRING - MANUAL OVERRIDE, "CLASSIC" SOLENOID
8	1	OP4	PIN , MANUAL OVERRIDE, 1/2", 3/4" & 1" VALVES
7	1	SSA48-O	ADAPTOR, 'A' SIDE, CLASSIC SOL., OVERRIDE, 1/2", 3/4" & 1" VALVE
6	1	S4	SPOOL - STANDARD, 2 POS, CLSD CTR, 1/2" VALVE
5	1	PEC48	END CAP, PILOT, 380 AL, 1/2", 3/4" & 1" VALVES
4	4	V-46	SCREW, 1/4-20 X 3/4, SOCKET HEAD CAP
3	1	ECG48-1	GASKET - END CAP, LOWER PILOT, 1/2", 3/4" & 1" VALVE
2	6	V-6	O-RING, BUNA-N, 70 DURO, AS-216, (REF 1-1/8 X 1-3/8 X 1/8), 1/2" VALVES, 1" SUBPLATE
1	1	BP4-4	BODY, 1/2" SUBPLATE, LOWER & UPPER PILOT

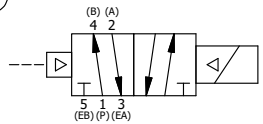

OPERATOR VOLTAGES	
PART NO	REPLACE OPERATOR
SR4PO 240/60	AY-38-17
SR4PO 24VDC	AY-38-8
SR4PO 12VDC	AY-38-5

LIMITS ON DIMENSIONS UNLESS OTHERWISE SPECIFIED
2-PL DECIMAL ± .01
3-PL DECIMAL ± .005
FRACTIONAL ± 1/64
ANGULAR ± 1/2'

AAA PRODUCTS INTERNATIONAL
7114 Harry Hines Blvd
Dallas, TX 75235

DRAWN: RMcKenna DATE: 7/16/2015
CHECKED: KWaite DATE: 7/16/2015
SCALE: 1 : 1 SHEET: 1 OF 1
RELEASED: HWomack DATE: 7/16/2015

TITLE:
1/2" SUBPLATE, SNGL SOL, 2 POS., FRICTION POS, PILOT RTRN, CLASSIC SOL, 120/60, LCKNG OVRD

PART NO.: SR4PO
REV.:

THE INFORMATION CONTAINED WITHIN THIS DOCUMENT IS PROPRIETARY TO AAA PRODUCTS AND MAY NOT BE DISCLOSED WITHOUT PRIOR WRITTEN CONSENT

D:\Engineering\Product\Valve\Assembly\Classic\SR4PO\Gt\SR4PO.dw