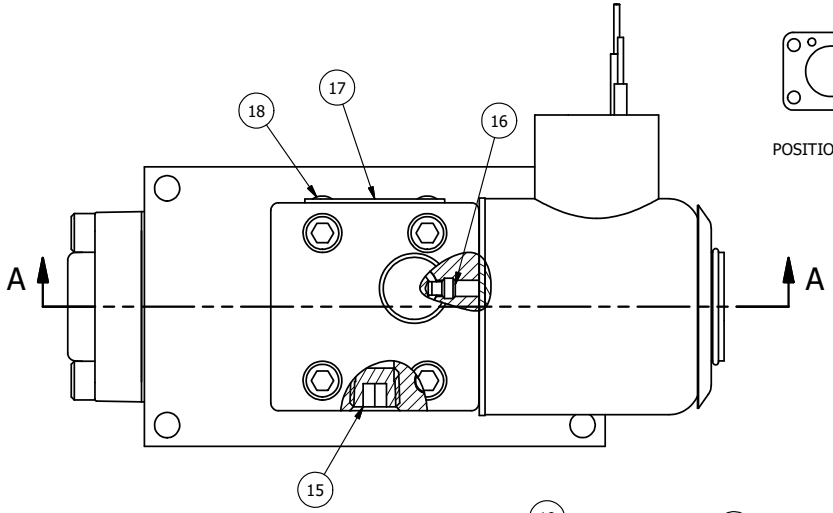

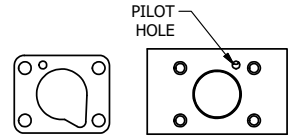

POSITION GASKET TO SEAL PILOT HOLE ON SIDE 'B' AS SHOWN.

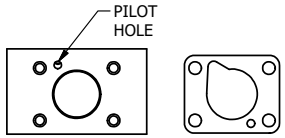

ALIGN PILOT HOLE AND CENTER CUTOUT ON SIDE 'A' AS SHOWN.

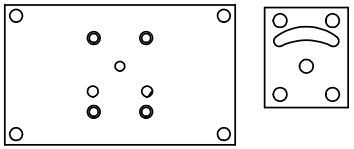

ALIGN HOLES IN GASKET AS SHOWN.
(FOR EXTERNAL PILOT PRESSURE, REMOVE PIGGY BACK BLOCK AND ROTATE 180°. LEAVE GASKET AS SHOWN. REMOVE 1/8" PLUG AND CONNECT SUPPLY PRESSURE - 160 PSI MAX.)

NOTES:
1) ALWAYS GIVE VALVE MODEL AND PART NUMBER WHEN ORDERING PARTS.
2) FOR DIFFERENT VOLTAGES OTHER THAN 120/60, REPLACE SOLENOID OPERATOR WITH OPERATOR LISTED IN TABLE BELOW.

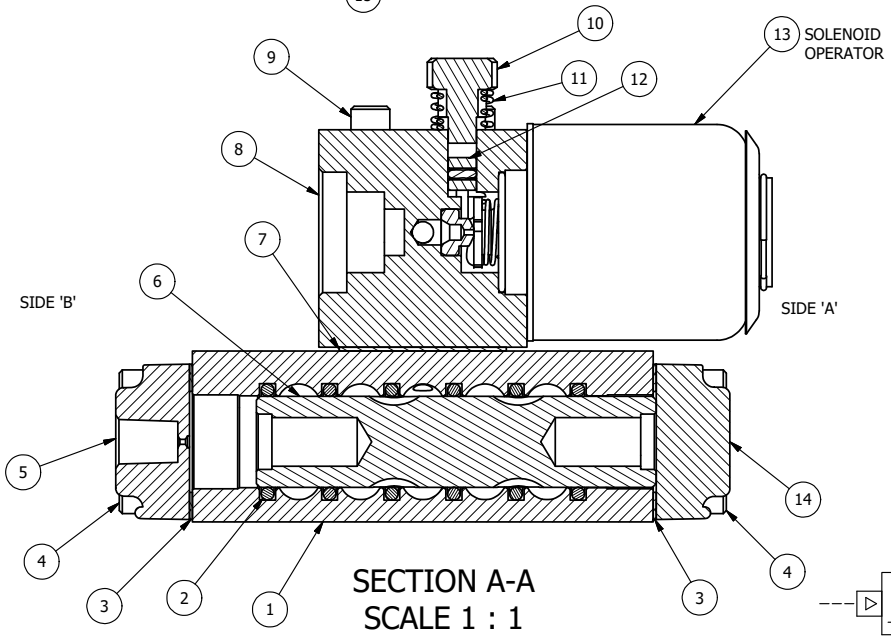

SECTION A-A
SCALE 1 : 1

FLG	QTY	PART NO	DESCRIPTION
18	2	V-212	SCREW, #2 X 3/16 DRIVE, TYPE U, OVAL HEAD, STAINLESS STEEL
17	1	AN-115	NAMEPLATE, BLANK, FOR HE,KE,RR,D,CR,PP,SR,SS VALVES
16	1	V-81	SCREW, 8-32 X 5/16, SOCKET SET, FULL DOG POINT
15	1	V-19	PLUG, SOCKET PIPE 1/8" NPT, 7/8 TAPER, FLUSH SEAL
14	1	SEC3-1	END CAP, NON-VENTED, 380 AL, 1/4" & 3/8" VALVES
13	1	AY-38X-11	CLASSIC SOLENOID - EXPLOSION PROOF, 120/60VAC, 38.5VDC, 110/50VAC
12	1	V-85	O-RING, BUNA-N, 70 DURO, AS-010, (REF 1/4 X 3/8 X 1/16), CLASSIC OVRD
11	1	OS3	SPRING - MANUAL OVERRIDE, "CLASSIC" SOLENOID
10	1	OP3	PIN - MANUAL OVERRIDE, 1/4" & 3/8" VALVES
9	4	V-1	SCREW, 10-24 X 2, SOCKET HEAD CAP
8	1	PB3-3E	ADAPTOR - SNGL SOL., W/OVERRIDE, 1/4" & 3/8" VALVES
7	1	PBG3-1	GASKET - PIGGY BACK, SINGLE SOLENOID, 1/4" & 3/8" VALVE
6	1	S3R	SPOOL - SOLID, STANDARD, 2 POS, CLSD CTR, 1/4" & 3/8" VALVE
5	1	PEC3	END CAP, PILOT, 380 AL, 1/4" & 3/8" VALVE
4	8	V-38	SCREW, 10-24 X 3/4, SOCKET HEAD CAP
3	2	ECG3	GASKET - END CAP, 1/4" & 3/8" VALVE
2	6	V-39	O-RING, VITON, STD BODY, 1/4" & 3/8" VALVES
1	1	B3-6E	BODY - SOLID, PIGGY BACK, ANODIZED, 3/8" SIDE PORT VALVE

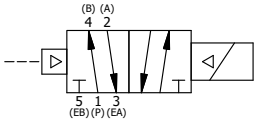

OPERATOR VOLTAGES	
PART NO	REPLACE OPERATOR
SR3XO 240/60	AY-38X-17
SR3XO 24VDC	AY-38X-8
SR3XO 12VDC	AY-38X-5

LIMITS ON DIMENSIONS UNLESS OTHERWISE SPECIFIED
2-PL DECIMAL ± .01
3-PL DECIMAL ± .005
FRACTIONAL ± 1/64
ANGULAR ± 1/2'

AAA PRODUCTS INTERNATIONAL
7114 Harry Hines Blvd
Dallas, TX 75235

DRAWN: RMcKenna DATE: 3/14/2016
CHECKED: KWaite DATE: 3/14/2016
SCALE: 1 : 1 SHEET: 1 OF 1
RELEASED: HWomack DATE: 3/14/2016

TITLE:
3/8" SIDE PORT, SNGL SOL, 2 POS, FRICTION POS, PILOT RTRN, EXPL PROOF, 120/60, LCKNG OVRD

PART NO.: SR3XO
REV.:

THE INFORMATION CONTAINED WITHIN THIS DOCUMENT IS PROPRIETARY TO AAA PRODUCTS AND MAY NOT BE DISCLOSED WITHOUT PRIOR WRITTEN CONSENT

D:\Engineering\Product\Valves\Assembly\classic\SR3xO\SR3XO.dw