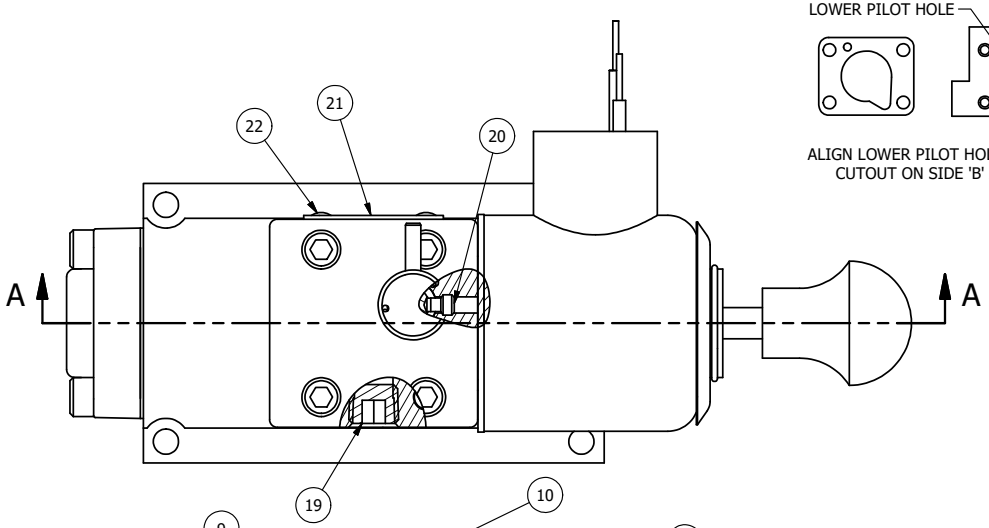

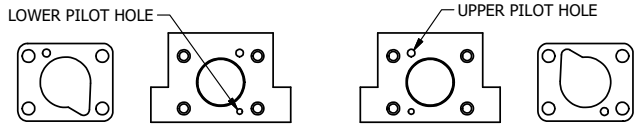

ALIGN LOWER PILOT HOLE AND CENTER CUTOUT ON SIDE 'B' AS SHOWN.

ALIGN UPPER PILOT HOLE AND CENTER CUTOUT ON SIDE 'A' AS SHOWN.

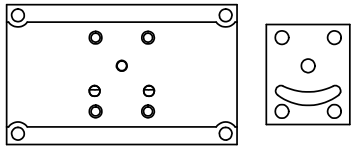

ALIGN HOLES IN GASKET AS SHOWN.
(FOR EXTERNAL PILOT PRESSURE, REMOVE PIGGY BACK BLOCK AND ROTATE 180°. LEAVE GASKET AS SHOWN. REMOVE 1/8" PLUG AND CONNECT SUPPLY PRESSURE - 160 PSI MAX.)

NOTES:
1) ALWAYS GIVE VALVE MODEL AND PART NUMBER WHEN ORDERING PARTS.
2) FOR DIFFERENT VOLTAGES OTHER THAN 120/60, REPLACE SOLENOID OPERATOR WITH OPERATOR LISTED IN TABLE BELOW.

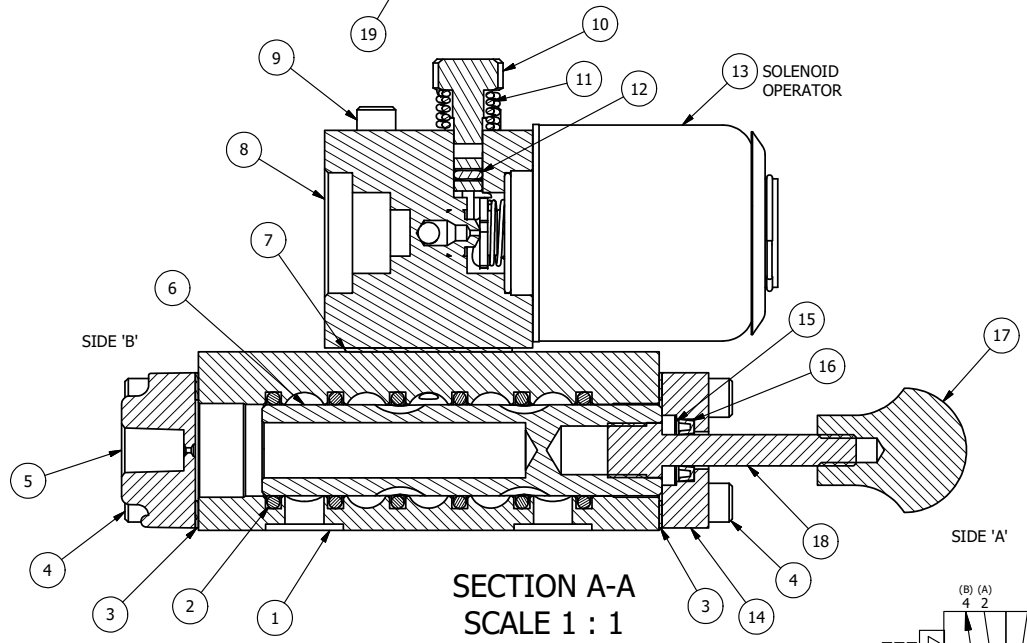

SECTION A-A
SCALE 1 : 1

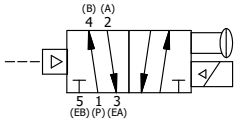

OPERATOR VOLTAGES	
PART NO	REPLACE OPERATOR
SR3PXONOS 12VDC	AY-38X-5
SR3PXONOS 24VDC	AY-38X-8
SR3PXONOS 240/60	AY-38X-17

FLG	QTY	PART NO	DESCRIPTION
23	1	SPK-3	KIT - SUBPLATE MOUNTING, 3/8" SUBPLATE VALVES
22	2	V-212	SCREW, #2 X 3/16 DRIVE, TYPE U, OVAL HEAD, STAINLESS STEEL
21	1	AN-114	NAMEPLATE, BLANK, FOR VALVES WITH SPRINGS OR DETENTS
20	1	V-81	SCREW, 8-32 X 5/16, SOCKET SET, FULL DOG POINT
19	1	V-19	PLUG, SOCKET PIPE 1/8" NPT, 7/8 TAPER, FLUSH SEAL
18	1	PIK3	PIN, SPOOL OVERRIDE, 303 STAINLESS, 1/4" & 3/8" VALVES
17	1	V-570	KNOB,BLACK (BRASS 1/4-20 INSERT), OS OPTION
16	1	V-78	U-CUP, 1/2 X 1/4 X 1/8, NITRILE
15	1	V-119	RING,CIRCULAR PUSH ON TYPE FOR INDICATOR PIN
14	1	PEC3-5	END CAP, INDICATOR PIN, WIPER CAVITY, 6061-T6, 1/4" & 3/8" VALVE
13	1	AY-38X-11	CLASSIC SOLENOID - EXPLOSION PROOF, 120/60VAC, 38.5VDC, 110/50VAC
12	1	V-85	O-RING, BUNA-N, 70 DURO, AS-010, (REF 1/4 X 3/8 X 1/16), CLASSIC OVRD
11	1	OS3W	SPRING - OVERRIDE RETURN, "CLASSIC" SOLENOID
10	1	OP3-W	OVERRIDE PIN - SPRING RETURN, 1/4" & 3/8" VALVE
9	4	V-1	SCREW, 10-24 X 2, SOCKET HEAD CAP
8	1	PB3-3EW	ADAPTOR - SNGL SOL., NON-LOCKING OVERRIDE, 1/4" & 3/8" VALVE
7	1	PBG3-1	GASKET - PIGGY BACK, SINGLE SOLENOID, 1/4" & 3/8" VALVE
6	1	S3	SPOOL - STANDARD, 2 POS, CLSD CTR, 1/4" & 3/8" VALVE
5	1	PEC3	END CAP, PILOT, 380 AL, 1/4" & 3/8" VALVE
4	8	V-38	SCREW, 10-24 X 3/4, SOCKET HEAD CAP
3	2	ECG3	GASKET - END CAP, 1/4" & 3/8" VALVE
2	6	V-39	O-RING, VITON, STD BODY, 1/4" & 3/8" VALVES
1	1	BP3-6E	BODY - SOLID, PIGGY BACK, ANODIZED, 3/8" SUBPLATE VALVE

LIMITS ON DIMENSIONS UNLESS OTHERWISE SPECIFIED
2-PL DECIMAL ± .01
3-PL DECIMAL ± .005
FRACTIONAL ± 1/64
ANGULAR ± 1/2'

AAA PRODUCTS INTERNATIONAL
7114 Harry Hines Blvd
Dallas, TX 75235

DRAWN: RMcKenna	DATE: 3/29/2020	CHECKED: KWaite	DATE: 3/29/2020
SCALE: 1 : 1	SHEET: 1 OF 1	RELEASED: HWomack	DATE: 3/29/2020

TITLE: 3/8" SUBPLATE, SNGL SOL, 2 POS, PILOT RTRN, EXPL PROOF, 120/60, NON-LCKNG OVRD, SPL OVRD

PART NO.: SR3PXONOS

REV.:

THE INFORMATION CONTAINED WITHIN THIS DOCUMENT IS PROPRIETARY TO AAA PRODUCTS AND MAY NOT BE DISCLOSED WITHOUT PRIOR WRITTEN CONSENT

D:\Engineering\Product\Valves\Assembly\classic\SNGL\WG\SR3PXONOS.dw