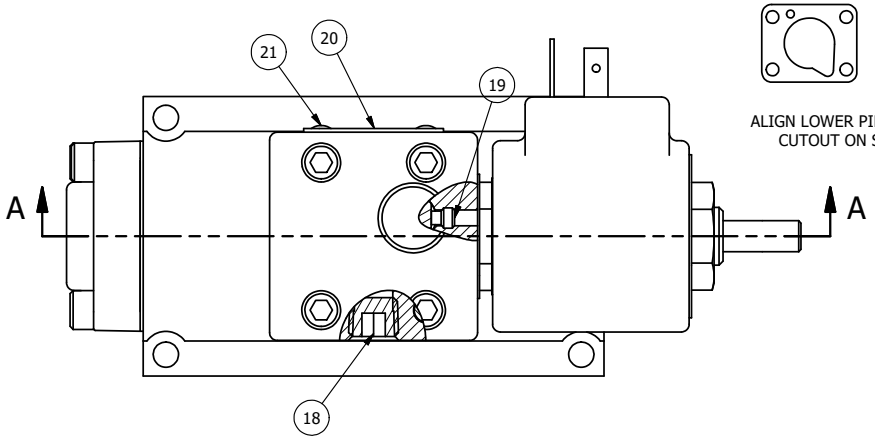

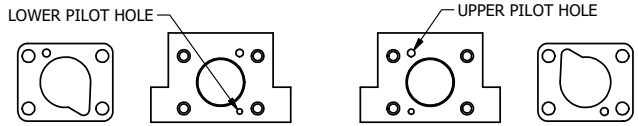

ALIGN LOWER PILOT HOLE AND CENTER CUTOUT ON SIDE 'B' AS SHOWN.

ALIGN UPPER PILOT HOLE AND CENTER CUTOUT ON SIDE 'A' AS SHOWN.

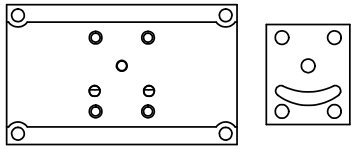

ALIGN HOLES IN GASKET AS SHOWN.
(FOR EXTERNAL PILOT PRESSURE, REMOVE PIGGY BACK BLOCK AND ROTATE 180°. LEAVE GASKET AS SHOWN. REMOVE 1/8" PLUG AND CONNECT SUPPLY PRESSURE - 160 PSI MAX.)

NOTES:
1) ALWAYS GIVE VALVE MODEL AND PART NUMBER WHEN ORDERING PARTS.
2) FOR DIFFERENT VOLTAGES OTHER THAN 120/60, REPLACE SOLENOID OPERATOR WITH OPERATOR LISTED IN TABLE BELOW. REFERENCE AY-38ED DRAWING FOR REPLACEMENT COILS.

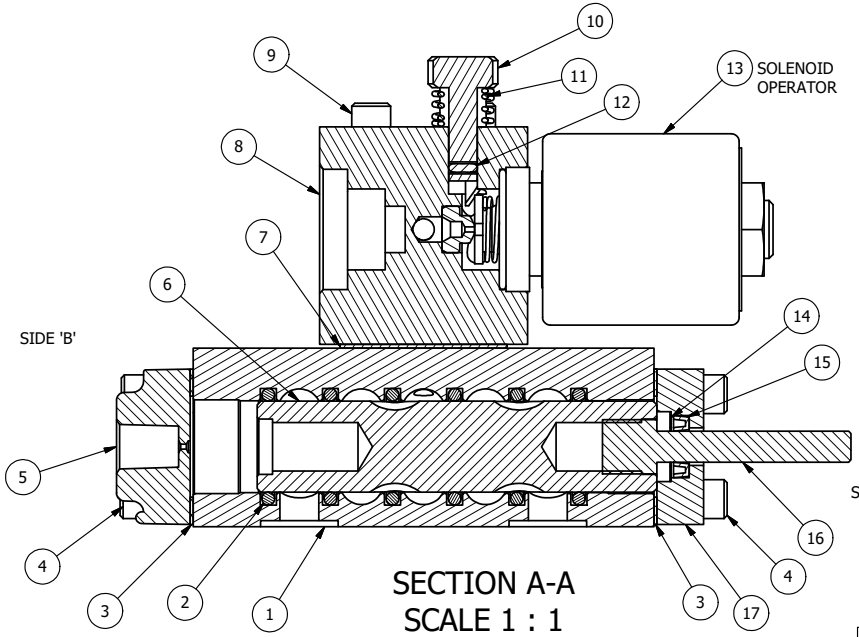

SECTION A-A
SCALE 1 : 1

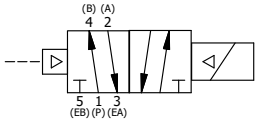

OPERATOR VOLTAGES	
PART NO	REPLACE OPERATOR
SR3PEDOPK 12VDC	AY-38ED-5
SR3PEDOPK 24VDC	AY-38ED-8
SR3PEDOPK 240/60	AY-38ED-17

FLG	QTY	PART NO	DESCRIPTION
22	1	SPK-3	KIT - SUBPLATE MOUNTING, 3/8" SUBPLATE VALVES
21	2	V-212	SCREW, #2 X 3/16 DRIVE, TYPE U, OVAL HEAD, STAINLESS STEEL
20	1	AN-115	NAMEPLATE, BLANK, FOR HE,KE,RR,D,CR,PP,SR,SS VALVES
19	1	V-81	SCREW, 8-32 X 5/16, SOCKET SET, FULL DOG POINT
18	1	V-19	PLUG, SOCKET PIPE 1/8" NPT, 7/8 TAPER, FLUSH SEAL
17	1	PEC3-5	END CAP, INDICATOR PIN, WIPER CAVITY, 6061-T6, 1/4" & 3/8" VALVE
16	1	PIK3	PIN, SPOOL OVERRIDE, 303 STAINLESS, 1/4" & 3/8" VALVES
15	1	V-78	U-CUP, 1/2 X 1/4 X 1/8, NITRILE
14	1	V-119	RING,CIRCULAR PUSH ON TYPE FOR INDICATOR PIN
13	1	AY-38ED-11	CLASSIC SOLENOID - ISO 4400 DIN, 120/60
12	1	V-85	O-RING, BUNA-N, 70 DURO, AS-010, (REF 1/4 X 3/8 X 1/16), CLASSIC OVRD
11	1	OS3	SPRING - MANUAL OVERRIDE, "CLASSIC" SOLENOID
10	1	POP-3	OVERRIDE, PUSH PIN, 303 STAINLESS, 1/4" & 3/8" VALVE
9	4	V-1	SCREW, 10-24 X 2, SOCKET HEAD CAP
8	1	PB3-3E	ADAPTOR - SNGL SOL., W/OVERRIDE, 1/4" & 3/8" VALVES
7	1	PBG3-1	GASKET - PIGGY BACK, SINGLE SOLENOID, 1/4" & 3/8" VALVE
6	1	S3R	SPOOL - SOLID, STANDARD, 2 POS, CLSD CTR, 1/4" & 3/8" VALVE
5	1	PEC3	END CAP, PILOT, 380 AL, 1/4" & 3/8" VALVE
4	8	V-38	SCREW, 10-24 X 3/4, SOCKET HEAD CAP
3	2	ECG3	GASKET - END CAP, 1/4" & 3/8" VALVE
2	6	V-39	O-RING, VITON, STD BODY, 1/4" & 3/8" VALVES
1	1	BP3-6E	BODY - SOLID, PIGGY BACK, ANODIZED, 3/8" SUBPLATE VALVE

LIMITS ON DIMENSIONS UNLESS OTHERWISE SPECIFIED
2-PL DECIMAL ± .01
3-PL DECIMAL ± .005
FRACTIONAL ± 1/64
ANGULAR ± 1/2'

AAA PRODUCTS INTERNATIONAL
7114 Harry Hines Blvd
Dallas, TX 75235

DRAWN: RMcKenna DATE: 6/22/2022
CHECKED: KWaite DATE: 6/22/2022
SCALE: 1 : 1 SHEET: 1 OF 1
RELEASED: HWomack DATE: 6/22/2022

TITLE: 3/8" SUBPLATE, SNGL SOL, 2 POS, PLT RTRN, ISO 4400 DIN, 120/60, PUSH OVRD, THREADED INDCTR PIN

PART NO.: SR3PEDOPK

REV.:

THE INFORMATION CONTAINED WITHIN THIS DOCUMENT IS PROPRIETARY TO AAA PRODUCTS AND MAY NOT BE DISCLOSED WITHOUT PRIOR WRITTEN CONSENT

D:\Engineering\Product\Valves\Assembly\Classic\SNGL\Wo\SR3PEDOPK.dw