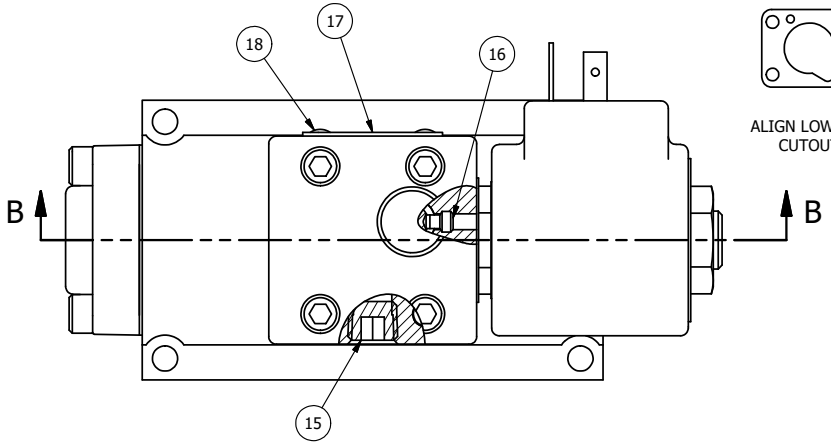

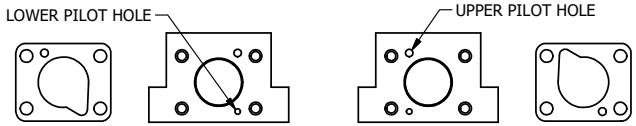

ALIGN LOWER PILOT HOLE AND CENTER CUTOUT ON SIDE 'B' AS SHOWN.

ALIGN UPPER PILOT HOLE AND CENTER CUTOUT ON SIDE 'A' AS SHOWN.

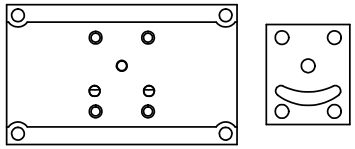

ALIGN HOLES IN GASKET AS SHOWN.
(FOR EXTERNAL PILOT PRESSURE, REMOVE PIGGY BACK BLOCK AND ROTATE 180°. LEAVE GASKET AS SHOWN. REMOVE 1/8" PLUG AND CONNECT SUPPLY PRESSURE - 160 PSI MAX.)

NOTES:
1) ALWAYS GIVE VALVE MODEL AND PART NUMBER WHEN ORDERING PARTS.
2) FOR DIFFERENT VOLTAGES OTHER THAN 120/60, REPLACE SOLENOID OPERATOR WITH OPERATOR LISTED IN TABLE BELOW. REFERENCE AY-38ED DRAWING FOR REPLACEMENT COILS.

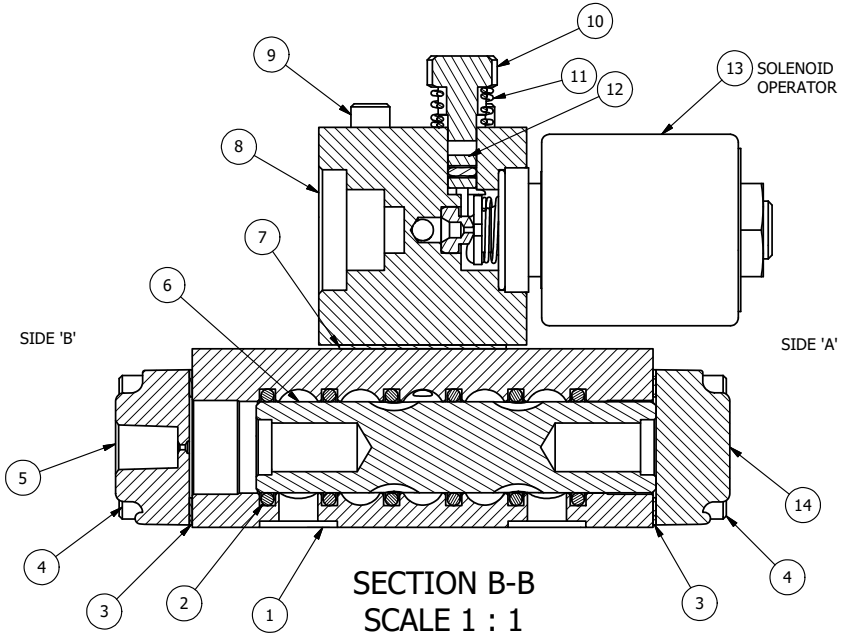

SECTION B-B
SCALE 1 : 1

FLG	QTY	PART NO	DESCRIPTION
19	1	SPK-3	KIT - SUBPLATE MOUNTING, 3/8" SUBPLATE VALVES
18	2	V-212	SCREW, #2 X 3/16 DRIVE, TYPE U, OVAL HEAD, STAINLESS STEEL
17	1	AN-115	NAMEPLATE, BLANK, FOR HE,KE,KD,RR,D,CR,PP,SR,SS VALVES
16	1	V-81	SCREW, 8-32 X 5/16, SOCKET SET, FULL DOG POINT
15	1	V-19	PLUG, SOCKET PIPE 1/8" NPT (#601-3 PITTSBURG PLUG PART #.)
14	1	SEC3-1	END CAP, NON-VENTED, 380 AL, 1/4" & 3/8" VALVES
13	1	AY-38ED-11	CLASSIC SOLENOID - ISO 4400 DIN, 120/60
12	1	V-85	O-RING, BUNA-N, 70 DURO, AS-010, (REF 1/4 X 3/8 X 1/16), CLASSIC OVRD
11	1	OS3	SPRING - MANUAL OVERRIDE, "CLASSIC" SOLENOID
10	1	OP3	PIN - MANUAL OVERRIDE, 1/4" & 3/8" VALVES
9	4	V-1	SCREW, 10-24 X 2, SOCKET HEAD CAP
8	1	PB3-3E	ADAPTOR - SNGL SOL., W/OVERRIDE, 1/4" & 3/8" VALVES
7	1	PBG3-1	GASKET - PIGGY BACK, SINGLE SOLENOID, 1/4" & 3/8" VALVE
6	1	S3R	SPOOL - SOLID, STANDARD, 2 POS, CLSD CTR, 1/4" & 3/8" VALVE
5	1	PEC3	END CAP, PILOT, 380 AL, 1/4" & 3/8" VALVE
4	8	V-38	SCREW, 10-24 X 3/4, SOCKET HEAD CAP
3	2	ECG3	GASKET - END CAP, 1/4" & 3/8" VALVE
2	6	V-39	O-RING, VITON, STD BODY, 1/4" & 3/8" VALVES
1	1	BP3-8E	BODY - SOLID, PIGGY BACK, LOWER PILOTS, 3/8" SUBPLATE VALVE

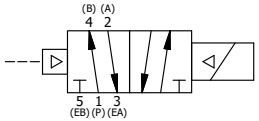

OPERATOR VOLTAGES	
PART NO	REPLACE OPERATOR
SR3PEDO 240/60	AY-38ED-17
SR3PEDO 24VDC	AY-38ED-8
SR3PEDO 12VDC	AY-38ED-5

LIMITS ON DIMENSIONS UNLESS OTHERWISE SPECIFIED
2-PL DECIMAL ± .01
3-PL DECIMAL ± .005
FRACTIONAL ± 1/64
ANGULAR ± 1/2'

AAA PRODUCTS INTERNATIONAL
7114 Harry Hines Blvd
Dallas, TX 75235

DRAWN: RMcKenna DATE: 1/8/2016
CHECKED: KWaite DATE: 1/8/2016
SCALE: 1 : 1 SHEET: 1 OF 1
RELEASED: HWomack DATE: 1/8/2016

TITLE: 3/8" SUBPLATE, SNGL SOL, 2 POS, PILOT RTRN, ISO 4400 DIN, 120/60, LCKNG OVRD

PART NO.: SR3PEDO

REV.:

THE INFORMATION CONTAINED WITHIN THIS DOCUMENT IS PROPRIETARY TO AAA PRODUCTS AND MAY NOT BE DISCLOSED WITHOUT PRIOR WRITTEN CONSENT

D:\Engineering\Product\Valve\Assembly\Classic\SR3\SR3PEDO.dwg