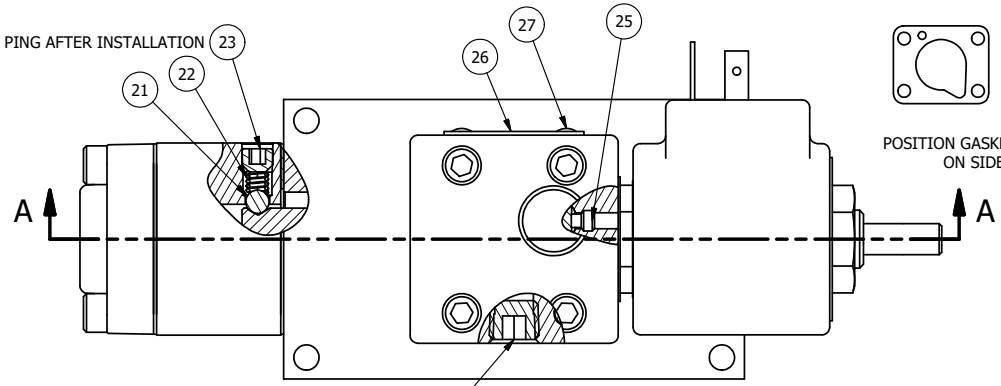

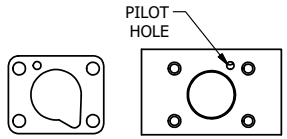

POSITION GASKET TO SEAL PILOT HOLE ON SIDE 'B' AS SHOWN.

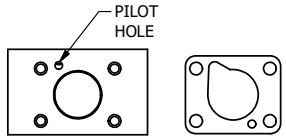

ALIGN PILOT HOLE AND CENTER CUTOUT ON SIDE 'A' AS SHOWN.

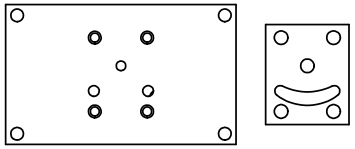

ALIGN HOLES IN GASKET AS SHOWN.
FOR EXTERNAL PILOT PRESSURE, REMOVE PIGGY BACK BLOCK AND ROTATE 180°. LEAVE GASKET AS SHOWN. REMOVE 1/8" PLUG AND CONNECT SUPPLY PRESSURE - 160 PSI MAX.

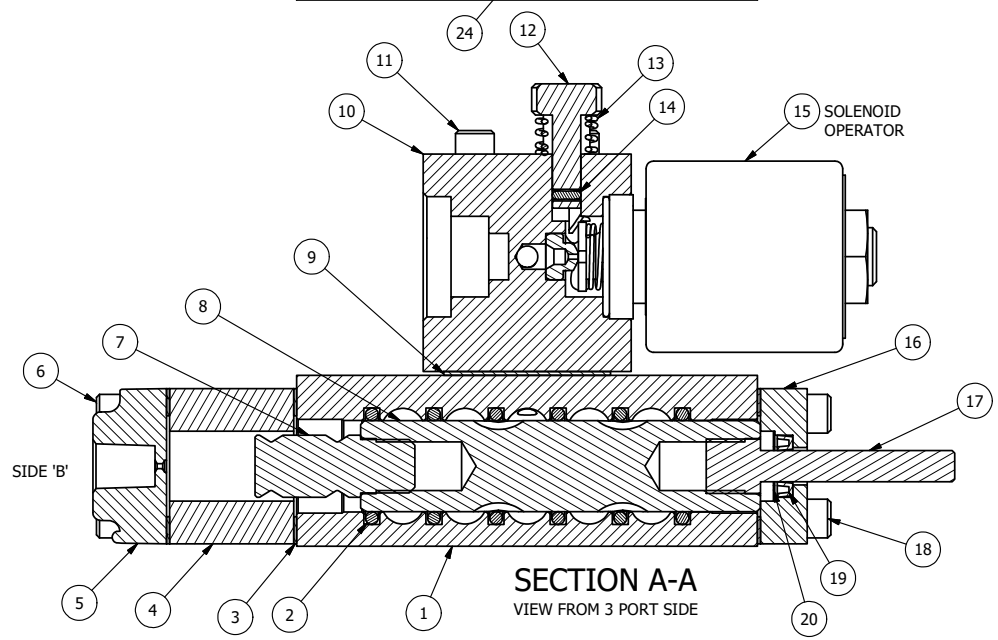

SIDE 'A'

SECTION A-A

VIEW FROM 3 PORT SIDE

FLG	QTY	PART NO	DESCRIPTION
27	2	V-212	SCREW, #2 X 3/16 DRIVE, TYPE U, OVAL HEAD, STAINLESS STEEL
26	1	AN-115	NAMEPLATE, BLANK, FOR HE,KE,RR,D,CR,PP,SR,SS VALVES
25	1	V-81	SCREW, 8-32 X 5/16, SOCKET SET, FULL DOG POINT
24	1	V-19	PLUG, 1/8-27 NPT, 7/8 TAPER, FLUSH SEAL, SOCKET PIPE PLUG W/LOCTITE RED VIBRA-SEAL
23	1	V-21	SCREW, 1/4-20 X 3/16, SOCKET SET, CUP POINT
22	1	DS3	SPRING - DETENT, 1/4" & 3/8" VALVE
21	1	V-14	BALL, CHROME STEEL 3/16 DIA, GRADE 25, FOR DETENT
20	1	V-119	RING,CIRCULAR PUSH ON TYPE FOR INDICATOR PIN
19	1	V-78	U-CUP, 1/2 X 1/4 X 1/8, NITRILE
18	4	V-38	SCREW, 10-24 X 3/4, SOCKET HEAD CAP
17	1	PIK3	PIN, SPOOL OVERRIDE, 303 STAINLESS, 1/4" & 3/8" VALVES
16	1	PEC3-5	END CAP, INDICATOR PIN, WIPER CAVITY, 6061-T6, 1/4" & 3/8" VALVE
15	1	AY-38EDT-11	CLASSIC SOLENOID - ISO 4400 DIN, 1/8" NPTF SOL EXHST, 120/60
14	1	V-85	O-RING, BUNA-N, 70 DURO, AS-010, (REF 1/4 X 3/8 X 1/16), CLASSIC OVRD
13	1	OS3	SPRING - MANUAL OVERRIDE, "CLASSIC" SOLENOID
12	1	POP-3	OVERRIDE, PUSH PIN, 303 STAINLESS, 1/4" & 3/8" VALVE
11	4	V-1	SCREW, 10-24 X 2, SOCKET HEAD CAP
10	1	PB3-3E	ADAPTOR - SNGL SOL., W/OVERRIDE, 1/4" & 3/8" VALVES
9	1	PBG3-1	GASKET - PIGGY BACK, SINGLE SOLENOID, 1/4" & 3/8" VALVE
8	1	S3R	SPOOL - SOLID, STANDARD, 2 POS, CLSD CTR, 1/4" & 3/8" VALVE
7	1	PBS3-13	STUD - POS. A & C. DETENT, SOLENOID OPERATOR, STAINLESS, 1/4" & 3/8" VALVE
6	4	V-614	SCREW, 10-24 X 1-3/4", SOCKET HEAD CAP
5	1	PEC3	END CAP, PILOT, 380 AL, 1/4" & 3/8" VALVE
4	1	PEC3-18	ENDCAP, SPACER, DETENT, SOLENOID, 6061-T6, 1/4" & 3/8" VALVES
3	3	ECG3	GASKET - END CAP, 1/4" & 3/8" VALVE
2	6	V-39	O-RING, VITON, STD BODY, 1/4" & 3/8" VALVES
1	1	B3-6E	BODY - SOLID, PIGGY BACK, ANODIZED, 3/8" SIDE PORT VALVE

NOTES:
1) ALWAYS GIVE VALVE MODEL AND PART NUMBER WHEN ORDERING PARTS.
2) FOR DIFFERENT VOLTAGES OTHER THAN 120/60, REPLACE SOLENOID OPERATOR WITH OPERATOR LISTED IN TABLE BELOW. REFERENCE AY-38EDT DRAWING FOR REPLACEMENT COILS.
3) LUBRICATE DETENT BALL, SPRING AND STUD.

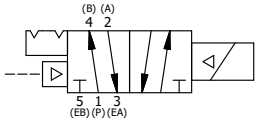

OPERATOR VOLTAGES	
PART NO	REPLACE OPERATOR
SR3EDOPTKQ 12VDC	AY-38EDT-5
SR3EDOPTKQ 24VDC	AY-38EDT-8
SR3EDOPTKQ 240/60	AY-38EDT-17

LIMITS ON DIMENSIONS UNLESS OTHERWISE SPECIFIED
2-PL DECIMAL ± .01
3-PL DECIMAL ± .005
FRACTIONAL ± 1/64
ANGULAR ± 1/2'

AAA PRODUCTS INTERNATIONAL
7114 Harry Hines Blvd
Dallas, TX 75235

DRAWN: RMcKenna DATE: 3/3/2025
CHECKED: KWaite DATE: 3/3/2025
SCALE: 1 : 1 SHEET: 1 OF 1
RELEASED: HWomack DATE: 3/3/2025

TITLE: 3/8" SIDE PORT, SNGL SOL, 2 POS, DTNT, PLT RTRN, ISO 4400, 120/60, PUSH OVRD, TPD VENT, INDCTR

PART NO.: SR3EDOPTKQ

REV.:

THE INFORMATION CONTAINED WITHIN THIS DOCUMENT IS PROPRIETARY TO AAA PRODUCTS AND MAY NOT BE DISCLOSED WITHOUT PRIOR WRITTEN CONSENT

D:\Engineering\Product\Valves\Assembly\classic\SR3\SR3EDOPTKQ.dw