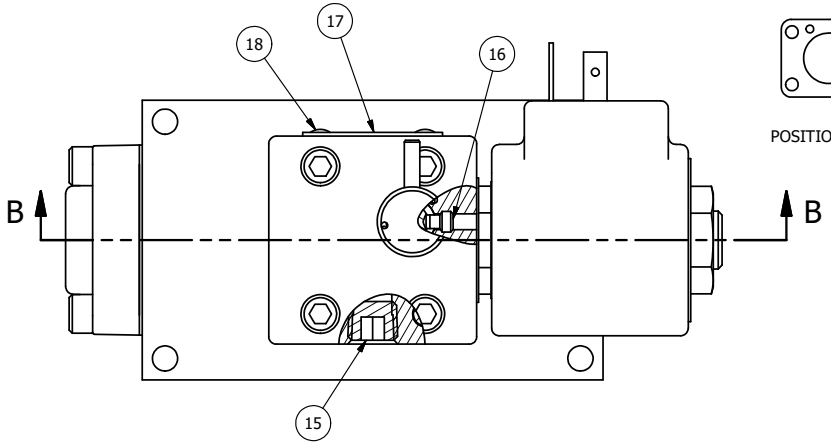

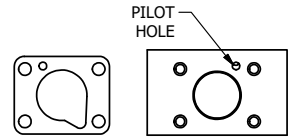

POSITION GASKET TO SEAL PILOT HOLE ON SIDE 'B' AS SHOWN.

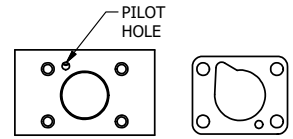

ALIGN PILOT HOLE AND CENTER CUTOUT ON SIDE 'A' AS SHOWN.

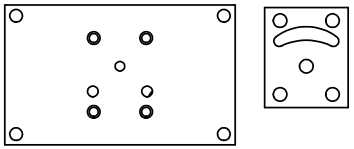

ALIGN HOLES IN GASKET AS SHOWN.
(FOR EXTERNAL PILOT PRESSURE, REMOVE PIGGY BACK BLOCK AND ROTATE 180°. LEAVE GASKET AS SHOWN. REMOVE 1/8" PLUG AND CONNECT SUPPLY PRESSURE - 160 PSI MAX.)

NOTES:
1) ALWAYS GIVE VALVE MODEL AND PART NUMBER WHEN ORDERING PARTS.
2) FOR DIFFERENT VOLTAGES OTHER THAN 120/60, REPLACE SOLENOID OPERATOR WITH OPERATOR LISTED IN TABLE BELOW. REFERENCE AY-38EDT DRAWING FOR REPLACEMENT COILS.

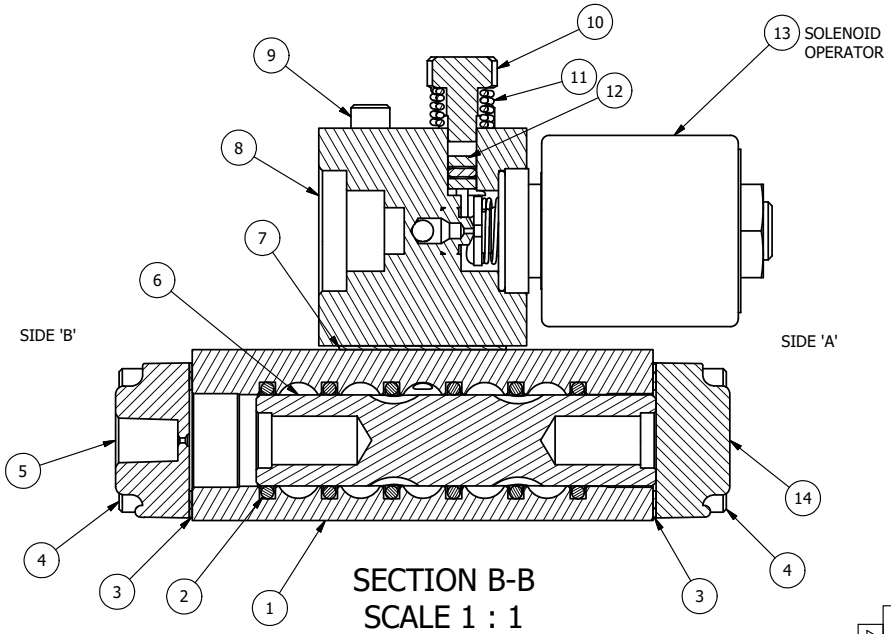

SECTION B-B
SCALE 1 : 1

FLG	QTY	PART NO	DESCRIPTION
18	2	V-212	SCREW, #2 X 3/16 DRIVE, TYPE U, OVAL HEAD, STAINLESS STEEL
17	1	AN-115	NAMEPLATE, BLANK, FOR HE,KE,KD,RR,D,CR,PP,SR,SS VALVES
16	1	V-81	SCREW, 8-32 X 5/16, SOCKET SET, FULL DOG POINT
15	1	V-19	PLUG, SOCKET PIPE 1/8" NPT (#601-3 PITTSBURG PLUG PART #.)
14	1	SEC3-1	END CAP, NON-VENTED, 380 AL, 1/4" & 3/8" VALVES
13	1	AY-38EDT-11	CLASSIC SOLENOID - ISO 4400 DIN, 1/8" NPTF SOL EXHST, 120/60
12	1	V-85	O-RING, BUNA-N, 70 DURO, AS-010, (REF 1/4 X 3/8 X 1/16), CLASSIC OVRD
11	1	OS3W	SPRING - OVERRIDE RETURN, "CLASSIC" SOLENOID
10	1	OP3-W	OVERRIDE PIN - SPRING RETURN, 1/4" & 3/8" VALVE
9	4	V-1	SCREW, 10-24 X 2, SOCKET HEAD CAP
8	1	PB3-3EW	ADAPTOR - SNGL SOL., NON-LOCKING OVERRIDE, 1/4" & 3/8" VALVE
7	1	PBG3-1	GASKET - PIGGY BACK, SINGLE SOLENOID, 1/4" & 3/8" VALVE
6	1	S3R	SPOOL - SOLID, STANDARD, 2 POS, CLSD CTR, 1/4" & 3/8" VALVE
5	1	PEC3	END CAP, PILOT, 380 AL, 1/4" & 3/8" VALVE
4	8	V-38	SCREW, 10-24 X 3/4, SOCKET HEAD CAP
3	2	ECG3	GASKET - END CAP, 1/4" & 3/8" VALVE
2	6	V-39	O-RING, VITON, STD BODY, 1/4" & 3/8" VALVES
1	1	B3-6E	BODY - SOLID, PIGGY BACK, ANODIZED, 3/8" SIDE PORT VALVE

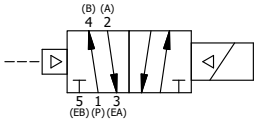

OPERATOR VOLTAGES	
PART NO	REPLACE OPERATOR
SR3EDONT 12VDC	AY-38EDT-5
SR3EDONT 24VDC	AY-38EDT-8
SR3EDONT 240/60	AY-38EDT-17

LIMITS ON DIMENSIONS UNLESS OTHERWISE SPECIFIED
2-PL DECIMAL ± .01
3-PL DECIMAL ± .005
FRACTIONAL ± 1/64
ANGULAR ± 1/2'

AAA PRODUCTS INTERNATIONAL
7114 Harry Hines Blvd
Dallas, TX 75235

DRAWN: RMcKenna DATE: 3/28/2020
CHECKED: KWaite DATE: 3/28/2020
SCALE: 1 : 1 SHEET: 1 OF 1
RELEASED: HWomack DATE: 3/28/2020

TITLE: 3/8" SIDE PORT, SNGL SOL, 2 POS, PILOT RTRN, ISO 44OO DIN, 120/60, NON-LCKNG OVRD, TPD VENT

PART NO.: SR3EDONT

REV.:

THE INFORMATION CONTAINED WITHIN THIS DOCUMENT IS PROPRIETARY TO AAA PRODUCTS AND MAY NOT BE DISCLOSED WITHOUT PRIOR WRITTEN CONSENT

D:\Engineering\Product\Valve\Assembly\Classic\SR3\SR3EDONT.dw