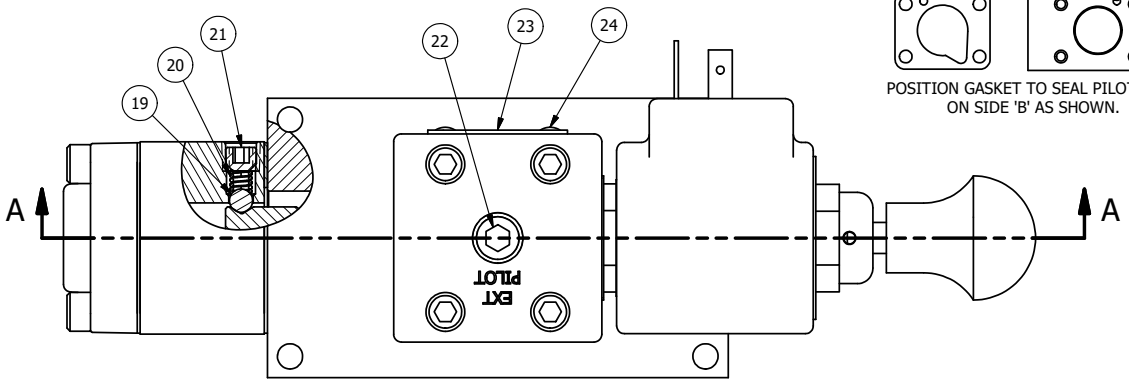

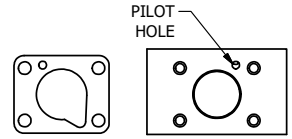

POSITION GASKET TO SEAL PILOT HOLE ON SIDE 'B' AS SHOWN.

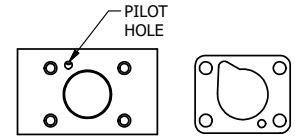

ALIGN PILOT HOLE AND CENTER CUTOUT ON SIDE 'A' AS SHOWN.

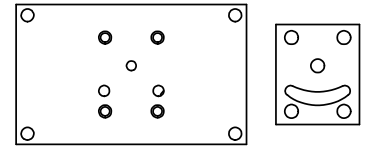

ALIGN HOLES IN GASKET AS SHOWN.
FOR EXTERNAL PILOT PRESSURE, REMOVE PIGGY BACK BLOCK AND ROTATE 180°. LEAVE GASKET AS SHOWN. REMOVE 1/8" PLUG AND CONNECT SUPPLY PRESSURE - 160 PSI MAX.

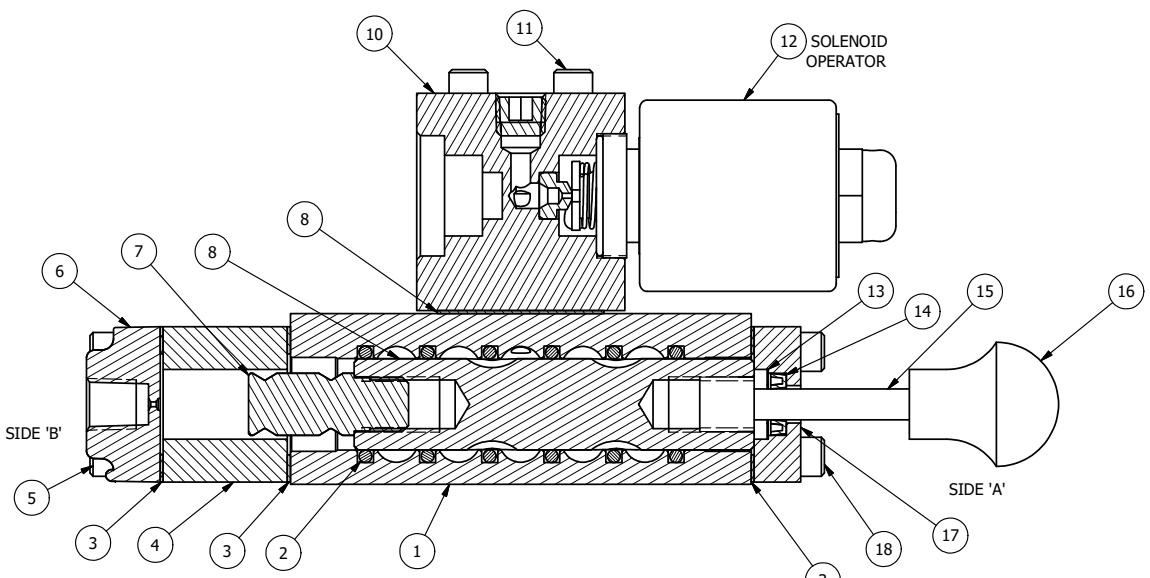

SECTION A-A

VIEW FROM 3 PORT SIDE

FLG	QTY	PART NO	DESCRIPTION
24	2	V-212	SCREW, #2 X 3/16 DRIVE, TYPE U, OVAL HEAD, STAINLESS STEEL
23	1	AN-115	NAMEPLATE, BLANK, FOR HE,KE,RR,D,CR,PP,SR,SS VALVES
22	1	V-19	PLUG, 1/8-27 NPT, 7/8 TAPER, FLUSH SEAL, SOCKET PIPE PLUG W/LOCTITE RED VIBRA-SEAL
21	1	V-21	SCREW, 1/4-20 X 3/16, SOCKET SET, CUP POINT
20	1	DS3	SPRING - DETENT, 1/4" & 3/8" VALVE
19	1	V-14	BALL, CHROME STEEL 3/16 DIA, GRADE 25, FOR DETENT
18	4	V-38	SCREW, 10-24 X 3/4, SOCKET HEAD CAP
17	1	PEC3-5	END CAP, INDICATOR PIN, WIPER CAVITY, 6061-T6, 1/4" & 3/8" VALVE
16	1	V-570	KNOB,BLACK (BRASS 1/4-20 INSERT), OS OPTION
15	1	PIK3	PIN, SPOOL OVERRIDE, 303 STAINLESS, 1/4" & 3/8" VALVES
14	1	V-78	U-CUP, 1/2 X 1/4 X 1/8, NITRILE
13	1	V-119	RING,CIRCULAR PUSH ON TYPE FOR INDICATOR PIN
12	1	AY-38EDL-11	CLASSIC SOLENOID - ISO 4400 DIN, DUST EXCLUDER NUT, 120/60
11	4	V-1	SCREW, 10-24 X 2, SOCKET HEAD CAP
10	1	PB3-1E	ADAPTOR - SINGLE SOLENOID, 1/4" & 3/8" VALVES
9	1	PBG3-1	GASKET - PIGGY BACK, SINGLE SOLENOID, 1/4" & 3/8" VALVE
8	1	S3R	SPOOL - SOLID, STANDARD, 2 POS, CLSD CTR, 1/4" & 3/8" VALVE
7	1	PBS3-13	STUD - POS. A & C. DETENT, SOLENOID OPERATOR, STAINLESS, 1/4" & 3/8" VALVE
6	1	PEC3	END CAP, PILOT, 380 AL, 1/4" & 3/8" VALVE
5	4	V-614	SCREW, 10-24 X 1-3/4", SOCKET HEAD CAP
4	1	PEC3-18	ENDCAP, SPACER, DETENT, SOLENOID, 6061-T6, 1/4" & 3/8" VALVES
3	3	ECG3	GASKET - END CAP, 1/4" & 3/8" VALVE
2	6	V-39	O-RING, VITON, STD BODY, 1/4" & 3/8" VALVES
1	1	B3-6E	BODY - SOLID, PIGGY BACK, ANODIZED, 3/8" SIDE PORT VALVE

NOTES:
1) ALWAYS GIVE VALVE MODEL AND PART NUMBER WHEN ORDERING PARTS.
2) FOR DIFFERENT VOLTAGES OTHER THAN 120/60, REPLACE SOLENOID OPERATOR WITH OPERATOR LISTED IN TABLE BELOW. REFERENCE AY-38EDL DRAWING FOR REPLACEMENT COILS.

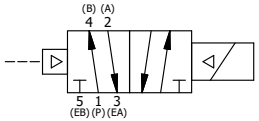

OPERATOR VOLTAGES	
PART NO	REPLACE OPERATOR
SR3EDLOSQ 12VDC	AY-38EDL-5
SR3EDLOSQ 24VDC	AY-38EDL-8
SR3EDLOSQ 240/60	AY-38EDL-17

LIMITS ON DIMENSIONS UNLESS OTHERWISE SPECIFIED
2-PL DECIMAL ± .01
3-PL DECIMAL ± .005
FRACTIONAL ± 1/64
ANGULAR ± 1/2'

AAA PRODUCTS INTERNATIONAL
7114 Harry Hines Blvd
Dallas, TX 75235

DRAWN: RMcKenna	DATE: 3/3/2025	CHECKED: KWaite	DATE: 3/3/2025
SCALE: 1 : 1	SHEET: 1 OF 1	RELEASED: HWomack	DATE: 3/3/2025

TITLE: 3/8" SIDE PORT, SNGL SOL, 2 POS, DTNT, PLT RTRN, ISO 4400, 120/60, DUST EXCLDR, MAN SPL OVRD

PART NO.: SR3EDLOSQ

REV.:

THE INFORMATION CONTAINED WITHIN THIS DOCUMENT IS PROPRIETARY TO AAA PRODUCTS AND MAY NOT BE DISCLOSED WITHOUT PRIOR WRITTEN CONSENT

D:\Engineering\Product\Valves\Assembly\classic\SR3EDLOSQ.dw