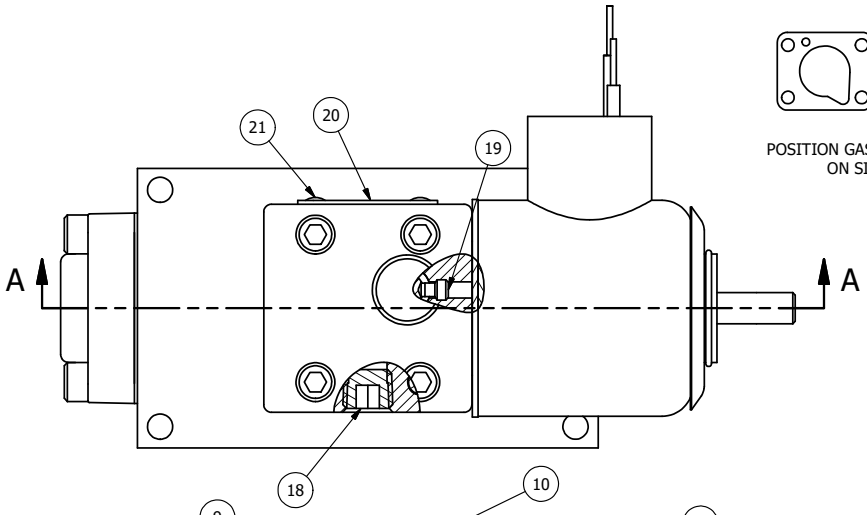


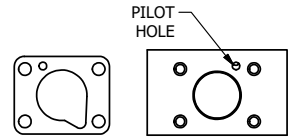


POSITION GASKET TO SEAL PILOT HOLE ON SIDE 'B' AS SHOWN.

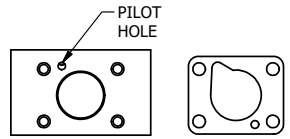


ALIGN PILOT HOLE AND CENTER CUTOUT ON SIDE 'A' AS SHOWN.

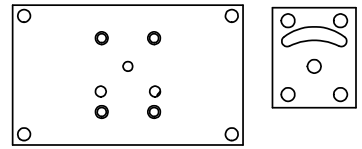

ALIGN HOLES IN GASKET AS SHOWN.
(FOR EXTERNAL PILOT PRESSURE, REMOVE PIGGY BACK BLOCK AND ROTATE 180°. LEAVE GASKET AS SHOWN. REMOVE 1/8" PLUG AND CONNECT SUPPLY PRESSURE - 160 PSI MAX.)

NOTES:
1) ALWAYS GIVE VALVE MODEL AND PART NUMBER WHEN ORDERING PARTS.
2) FOR DIFFERENT VOLTAGES OTHER THAN 120/60, REPLACE SOLENOID OPERATOR WITH OPERATOR LISTED IN TABLE BELOW.

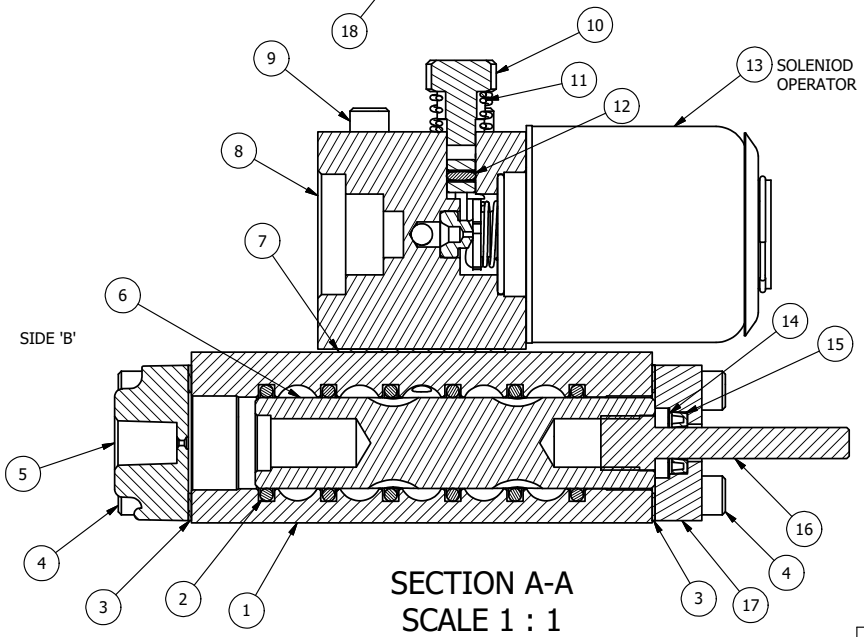


SECTION A-A
SCALE 1 : 1

| FLG | QTY | PART NO | DESCRIPTION |
|---|---|---|---|
| 21 | 2 | V-212 | SCREW, #2 X 3/16 DRIVE, TYPE U, OVAL HEAD, STAINLESS STEEL |
| 20 | 1 | AN-115 | NAMEPLATE, BLANK, FOR HE,KE,RR,D,CR,PP,SR,SS VALVES |
| 19 | 1 | V-81 | SCREW, 8-32 X 5/16, SOCKET SET, FULL DOG POINT |
| 18 | 1 | V-19 | PLUG, SOCKET PIPE 1/8" NPT, 7/8 TAPER, FLUSH SEAL |
| 17 | 1 | PEC3-5 | END CAP, INDICATOR PIN, WIPER CAVITY, 6061-T6, 1/4" & 3/8" VALVE |
| 16 | 1 | PIK3 | PIN, SPOOL OVERRIDE, 303 STAINLESS, 1/4" & 3/8" VALVES |
| 15 | 1 | V-78 | U-CUP, 1/2 X 1/4 X 1/8, NITRILE |
| 14 | 1 | V-119 | RING,CIRCULAR PUSH ON TYPE FOR INDICATOR PIN |
| 13 | 1 | AY-38X-11 | CLASSIC SOLENOID - EXPLOSION PROOF, 120/60VAC, 38.5VDC, 110/50VAC |
| 12 | 1 | V-85 | O-RING, BUNA-N, 70 DURO, AS-010, (REF 1/4 X 3/8 X 1/16), CLASSIC OVRD |
| 11 | 1 | OS3 | SPRING - MANUAL OVERRIDE, "CLASSIC" SOLENOID |
| 10 | 1 | OP3 | PIN - MANUAL OVERRIDE, 1/4" & 3/8" VALVES |
| 9 | 4 | V-1 | SCREW, 10-24 X 2, SOCKET HEAD CAP |
| 8 | 1 | PB3-3E | ADAPTOR - SNGL SOL., W/OVERRIDE, 1/4" & 3/8" VALVES |
| 7 | 1 | PBG3-1 | GASKET - PIGGY BACK, SINGLE SOLENOID, 1/4" & 3/8" VALVE |
| 6 | 1 | S3R | SPOOL - SOLID, STANDARD, 2 POS, CLSD CTR, 1/4" & 3/8" VALVE |
| 5 | 1 | PEC3 | END CAP, PILOT, 380 AL, 1/4" & 3/8" VALVE |
| 4 | 8 | V-38 | SCREW, 10-24 X 3/4, SOCKET HEAD CAP |
| 3 | 2 | ECG3 | GASKET - END CAP, 1/4" & 3/8" VALVE |
| 2 | 6 | V-39 | O-RING, VITON, STD BODY, 1/4" & 3/8" VALVES |
| 1 | 1 | B2-6E | BODY - SOLID, PIGGY BACK, ANODIZED, 1/4" SIDE PORT VALVE |

SIDE 'A'

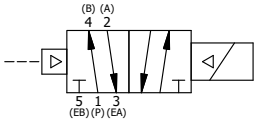


| OPERATOR VOLTAGES | |
|---|---|
| PART NO | REPLACE OPERATOR |
| SR2XOK 12VDC | AY-38X-5 |
| SR2XOK 24VDC | AY-38X-8 |
| SR2XOK 240/60 | AY-38X-17 |

LIMITS ON DIMENSIONS UNLESS OTHERWISE SPECIFIED
2-PL DECIMAL ± .01
3-PL DECIMAL ± .005
FRACTIONAL ± 1/64
ANGULAR ± 1/2'

**AAA PRODUCTS INTERNATIONAL**
7114 Harry Hines Blvd
Dallas, TX 75235

| | | | |
|---|---|---|---|
| DRAWN: RMcKenna | DATE: 1/14/2019 | CHECKED: KWaite | DATE: 1/14/2019 |
| SCALE: 1 : 1 | SHEET: 1 OF 1 | RELEASED: HWomack | DATE: 1/14/2019 |

TITLE: 1/4" SIDE PORT, SNGL SOL, 2 POS, PILOT RTRN, EXPL PROOF 120/60, LCKNG OVRD, THREADED INDCTR PIN

PART NO.: SR2XOK

REV.:

THE INFORMATION CONTAINED WITHIN THIS DOCUMENT IS PROPRIETARY TO AAA PRODUCTS AND MAY NOT BE DISCLOSED WITHOUT PRIOR WRITTEN CONSENT

D:\Engineering\Product\Valves\Assembly\classic\SR2\VG\SR2XOK.dw