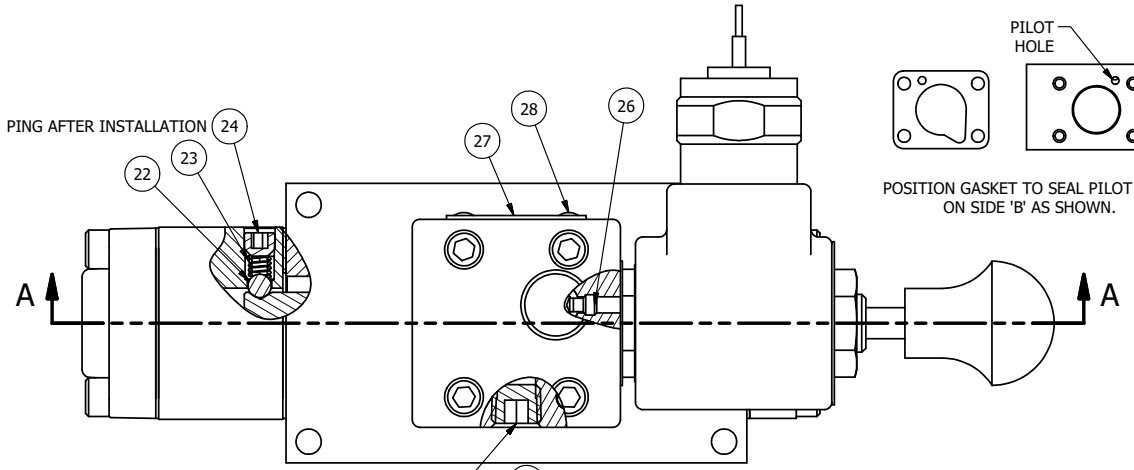

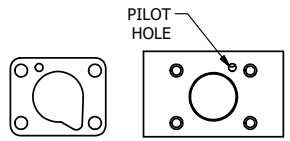

POSITION GASKET TO SEAL PILOT HOLE ON SIDE 'B' AS SHOWN.

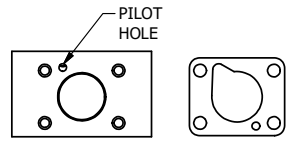

ALIGN PILOT HOLE AND CENTER CUTOUT ON SIDE 'A' AS SHOWN.

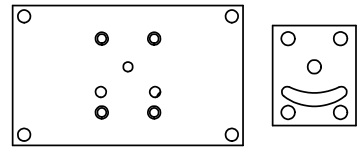

ALIGN HOLES IN GASKET AS SHOWN.
FOR EXTERNAL PILOT PRESSURE, REMOVE PIGGY BACK BLOCK AND ROTATE 180°. LEAVE GASKET AS SHOWN. REMOVE 1/8" PLUG AND CONNECT SUPPLY PRESSURE - 160 PSI MAX.

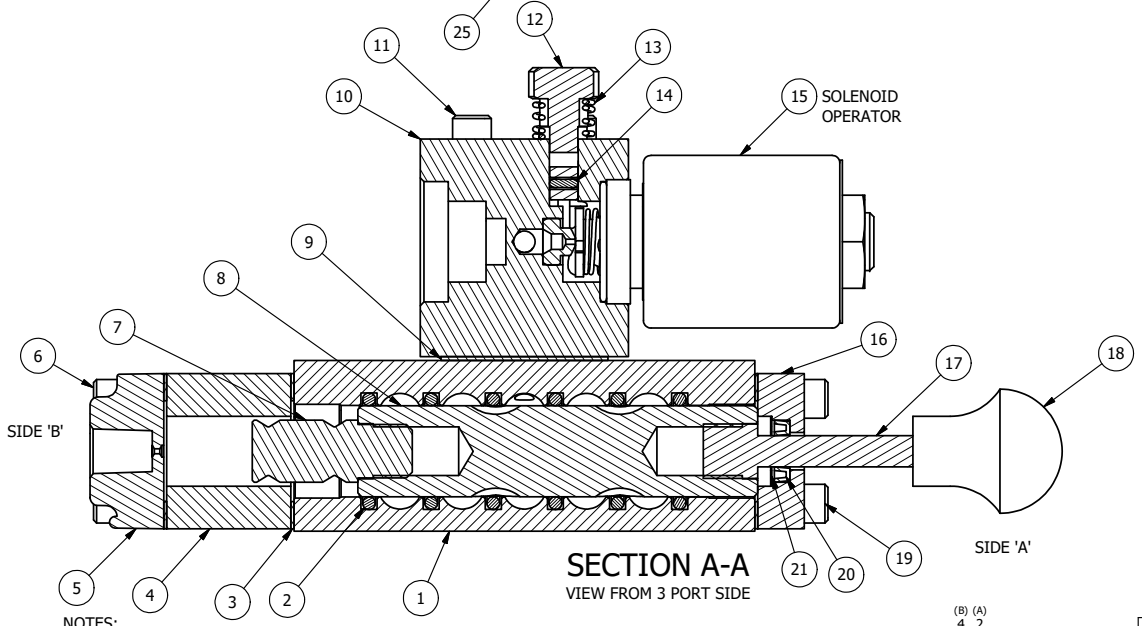

SECTION A-A

VIEW FROM 3 PORT SIDE

FLG	QTY	PART NO	DESCRIPTION
28	2	V-212	SCREW, #2 X 3/16 DRIVE, TYPE U, OVAL HEAD, STAINLESS STEEL
27	1	AN-115	NAMEPLATE, BLANK, FOR HE,KE,RR,D,CR,PP,SR,SS VALVES
26	1	V-81	SCREW, 8-32 X 5/16, SOCKET SET, FULL DOG POINT
25	1	V-19	PLUG, 1/8-27 NPT, 7/8 TAPER, FLUSH SEAL, SOCKET PIPE PLUG W/LOCTITE RED VIBRA-SEAL
24	1	V-21	SCREW, 1/4-20 X 3/16, SOCKET SET, CUP POINT
23	1	DS3	SPRING - DETENT, 1/4" & 3/8" VALVE
22	1	V-14	BALL, CHROME STEEL 3/16 DIA, GRADE 25, FOR DETENT
21	1	V-119	RING,CIRCULAR PUSH ON TYPE FOR INDICATOR PIN
20	1	V-78	U-CUP, 1/2 X 1/4 X 1/8, NITRILE
19	4	V-38	SCREW, 10-24 X 3/4, SOCKET HEAD CAP
18	1	V-570	KNOB,BLACK (BRASS 1/4-20 INSERT), OS OPTION
17	1	PIK3	PIN, SPOOL OVERRIDE, 303 STAINLESS, 1/4" & 3/8" VALVES
16	1	PEC3-5	END CAP, INDICATOR PIN, WIPER CAVITY, 6061-T6, 1/4" & 3/8" VALVE
15	1	AY-38MT-11	CLASSIC SOLENOID - 1/2" NPT CONDUIT, 120/60, TAPPED EXH
14	1	V-85	O-RING, BUNA-N, 70 DURO, AS-010, (REF 1/4 X 3/8 X 1/16), CLASSIC OVRD
13	1	OS3	SPRING - MANUAL OVERRIDE, "CLASSIC" SOLENOID
12	1	OP3	PIN - MANUAL OVERRIDE, 1/4" & 3/8" VALVES
11	4	V-1	SCREW, 10-24 X 2, SOCKET HEAD CAP
10	1	PB3-3E	ADAPTOR - SNGL SOL., W/OVERRIDE, 1/4" & 3/8" VALVES
9	1	PBG3-1	GASKET - PIGGY BACK, SINGLE SOLENOID, 1/4" & 3/8" VALVE
8	1	S3R	SPOOL - SOLID, STANDARD, 2 POS, CLSD CTR, 1/4" & 3/8" VALVE
7	1	PBS3-13	STUD - POS. A & C. DETENT, SOLENOID OPERATOR, STAINLESS, 1/4" & 3/8" VALVE
6	4	V-614	SCREW, 10-24 X 1-3/4", SOCKET HEAD CAP
5	1	PEC3	END CAP, PILOT, 380 AL, 1/4" & 3/8" VALVE
4	1	PEC3-18	ENDCAP, SPACER, DETENT, SOLENOID, 6061-T6, 1/4" & 3/8" VALVES
3	3	ECG3	GASKET - END CAP, 1/4" & 3/8" VALVE
2	6	V-39	O-RING, VITON, STD BODY, 1/4" & 3/8" VALVES
1	1	B2-6E	BODY - SOLID, PIGGY BACK, ANODIZED, 1/4" SIDE PORT VALVE

NOTES:
1) ALWAYS GIVE VALVE MODEL AND PART NUMBER WHEN ORDERING PARTS.
2) FOR DIFFERENT VOLTAGES OTHER THAN 120/60, REPLACE SOLENOID OPERATOR WITH OPERATOR LISTED IN TABLE BELOW. REFERENCE AY-38MT DRAWING FOR REPLACEMENT COILS.
3) LUBRICATE DETENT BALL, SPRING AND STUD.

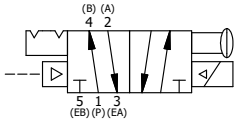

OPERATOR VOLTAGES	
PART NO	REPLACE OPERATOR
SR2MOTOSQ 12VDC	AY-38MT-5
SR2MOTOSQ 24VDC	AY-38MT-8
SR2MOTOSQ 240/60	AY-38MT-17

LIMITS ON DIMENSIONS UNLESS OTHERWISE SPECIFIED
2-PL DECIMAL ± .01
3-PL DECIMAL ± .005
FRACTIONAL ± 1/64
ANGULAR ± 1/2'

AAA PRODUCTS INTERNATIONAL
7114 Harry Hines Blvd
Dallas, TX 75235

DRAWN: RMcKenna	DATE: 3/3/2025	CHECKED: KWaite	DATE: 3/3/2025
SCALE: 1 : 1	SHEET: 1 OF 1	RELEASED: HWomack	DATE: 3/3/2025

TITLE: 1/4" SIDE PORT, SNGL SOL, 2 POS, DTNT, PLT RTRN, MOLD-OVER, 120/60, LCKNG OVRD, TPD VENT, SPL OVRD

PART NO.: SR2MOTOSQ

REV.:

THE INFORMATION CONTAINED WITHIN THIS DOCUMENT IS PROPRIETARY TO AAA PRODUCTS AND MAY NOT BE DISCLOSED WITHOUT PRIOR WRITTEN CONSENT

D:\Engineering\Product\Valves\Assembly\classic\SR2\SR2MOTOSQ.dw