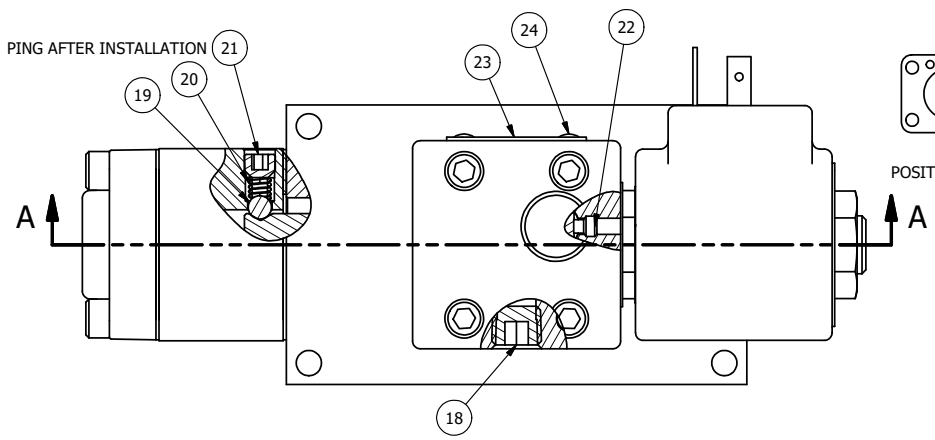

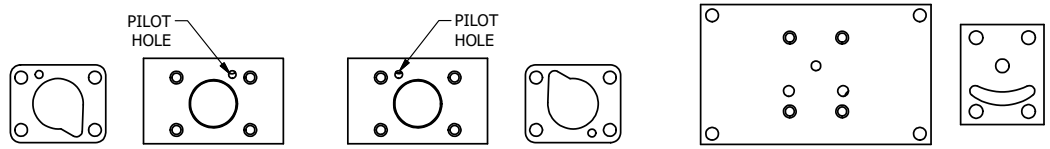

POSITION GASKET TO SEAL PILOT HOLE ON SIDE 'B' AS SHOWN.

ALIGN PILOT HOLE AND CENTER CUTOUT ON SIDE 'A' AS SHOWN.

ALIGN HOLES IN GASKET AS SHOWN. FOR EXTERNAL PILOT PRESSURE, REMOVE PIGGY BACK BLOCK AND ROTATE 180°. LEAVE GASKET AS SHOWN. REMOVE 1/8" PLUG AND CONNECT SUPPLY PRESSURE - 160 PSI MAX.

NOTES:
1) ALWAYS GIVE VALVE MODEL AND PART NUMBER WHEN ORDERING PARTS.
2) FOR DIFFERENT VOLTAGES OTHER THAN 120/60, REPLACE SOLENOID OPERATOR WITH OPERATOR LISTED IN TABLE BELOW. REFERENCE AY-38EDT DRAWING FOR REPLACEMENT COILS.
3) LUBRICATE DETENT BALL, SPRING AND STUD.

FLG	QTY	PART NO	DESCRIPTION
24	2	V-212	SCREW, #2 X 3/16 DRIVE, TYPE U, OVAL HEAD, STAINLESS STEEL
23	1	AN-115	NAMEPLATE, BLANK, FOR HE,KE,RR,D,CR,PP,SR,SS VALVES
22	1	V-81	SCREW, 8-32 X 5/16, SOCKET SET, FULL DOG POINT
21	1	V-21	SCREW, 1/4-20 X 3/16, SOCKET SET, CUP POINT
20	1	DS3	SPRING - DETENT, 1/4" & 3/8" VALVE
19	1	V-14	BALL, CHROME STEEL 3/16 DIA, GRADE 25, FOR DETENT
18	1	V-19	PLUG, 1/8-27 NPT, 7/8 TAPER, FLUSH SEAL, SOCKET PIPE PLUG W/LOCTITE RED VIBRA-SEAL
17	4	V-38	SCREW, 10-24 X 3/4, SOCKET HEAD CAP
16	1	SEC3-1	END CAP, NON-VENTED, 380 AL, 1/4" & 3/8" VALVES
15	1	AY-38EDT-11	CLASSIC SOLENOID - ISO 4400 DIN, 1/8" NPTF SOL EXHST, 120/60
14	1	V-85	O-RING, BUNA-N, 70 DURO, AS-010, (REF 1/4 X 3/8 X 1/16), CLASSIC OVRD
13	1	OS3	SPRING - MANUAL OVERRIDE, "CLASSIC" SOLENOID
12	1	POP-3	OVERRIDE, PUSH PIN, 303 STAINLESS, 1/4" & 3/8" VALVE
11	4	V-1	SCREW, 10-24 X 2, SOCKET HEAD CAP
10	1	PB3-3E	ADAPTOR - SNGL SOL., W/OVERRIDE, 1/4" & 3/8" VALVES
9	1	PBG3-1	GASKET - PIGGY BACK, SINGLE SOLENOID, 1/4" & 3/8" VALVE
8	1	S3R	SPOOL - SOLID, STANDARD, 2 POS, CLSD CTR, 1/4" & 3/8" VALVE
7	1	PBS3-13	STUD - POS. A & C. DETENT, SOLENOID OPERATOR, STAINLESS, 1/4" & 3/8" VALVE
6	4	V-614	SCREW, 10-24 X 1-3/4", SOCKET HEAD CAP
5	1	PEC3	END CAP, PILOT, 380 AL, 1/4" & 3/8" VALVE
4	1	PEC3-18	ENDCAP, SPACER, DETENT, SOLENOID, 6061-T6, 1/4" & 3/8" VALVES
3	3	ECG3	GASKET - END CAP, 1/4" & 3/8" VALVE
2	6	V-39	O-RING, VITON, STD BODY, 1/4" & 3/8" VALVES
1	1	B2-6E	BODY - SOLID, PIGGY BACK, ANODIZED, 1/4" SIDE PORT VALVE

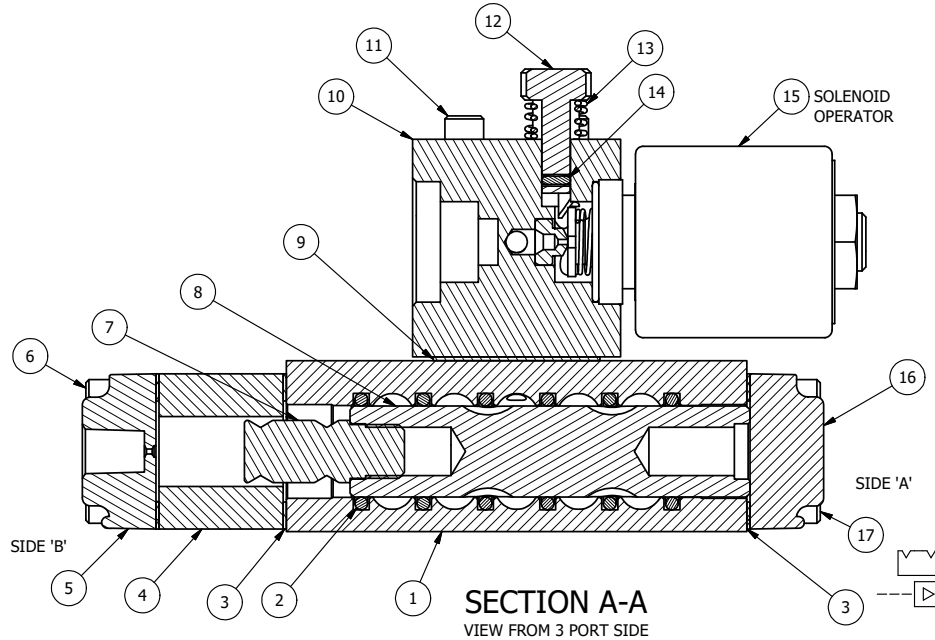

SECTION A-A
VIEW FROM 3 PORT SIDE

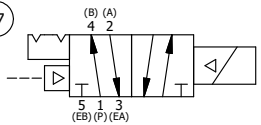

OPERATOR VOLTAGES	
PART NO	REPLACE OPERATOR
SR2EDOPTQ 12VDC	AY-38EDT-5
SR2EDOPTQ 24VDC	AY-38EDT-8
SR2EDOPTQ 240/60	AY-38EDT-17

LIMITS ON DIMENSIONS UNLESS OTHERWISE SPECIFIED
2-PL DECIMAL ± .01
3-PL DECIMAL ± .005
FRACTIONAL ± 1/64
ANGULAR ± 1/2'

AAA PRODUCTS INTERNATIONAL
7114 Harry Hines Blvd
Dallas, TX 75235

DRAWN: RMcKenna	DATE: 3/3/2025	CHECKED: KWaite	DATE: 3/3/2025
SCALE: 1 : 1	SHEET: 1 OF 1	RELEASED: HWomack	DATE: 3/3/2025

TITLE: 1/4" SIDE PORT, SNGL SOL, 2 POS, DTNT, PLT RTRN, ISO 4400, 120/60, PUSH OVRD, TPD VENT

PART NO.: SR2EDOPTQ

REV.:

THE INFORMATION CONTAINED WITHIN THIS DOCUMENT IS PROPRIETARY TO AAA PRODUCTS AND MAY NOT BE DISCLOSED WITHOUT PRIOR WRITTEN CONSENT

D:\Engineering\Product\Valves\Assembly\classic\SNGL\SR2EDOPTQ.dwg