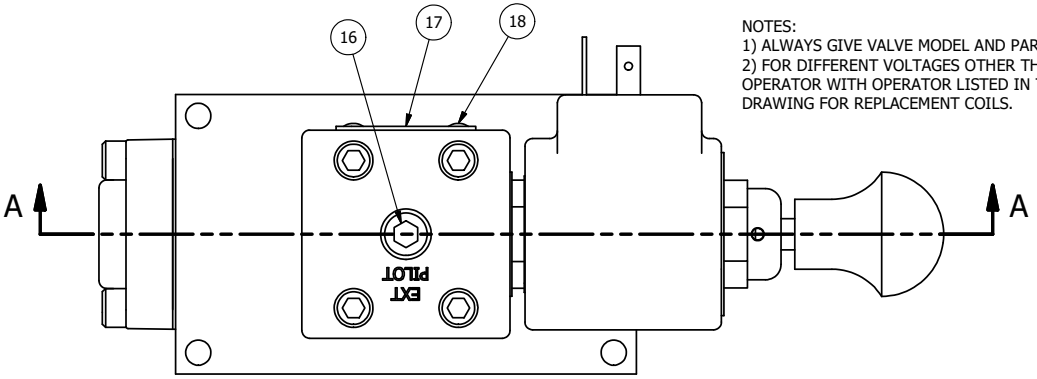

NOTES:
1) ALWAYS GIVE VALVE MODEL AND PART NUMBER WHEN ORDERING PARTS.
2) FOR DIFFERENT VOLTAGES OTHER THAN 120/60, REPLACE SOLENOID OPERATOR WITH OPERATOR LISTED IN TABLE BELOW. REFERENCE AY-38EDL DRAWING FOR REPLACEMENT COILS.

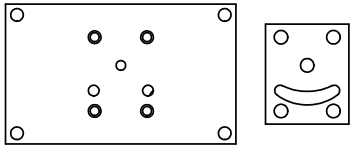

ALIGN HOLES IN GASKET AS SHOWN.
FOR EXTERNAL PILOT PRESSURE, REMOVE PIGGY BACK BLOCK AND ROTATE 180°. LEAVE GASKET AS SHOWN. REMOVE 1/8" PLUG AND CONNECT SUPPLY PRESSURE - 160 PSI MAX.

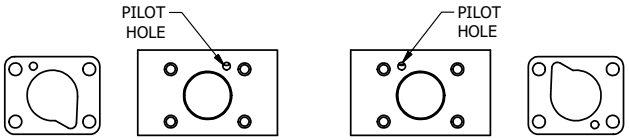

POSITION GASKET TO SEAL PILOT HOLE ON SIDE 'B' AS SHOWN.

ALIGN PILOT HOLE AND CENTER CUTOUT ON SIDE 'A' AS SHOWN.

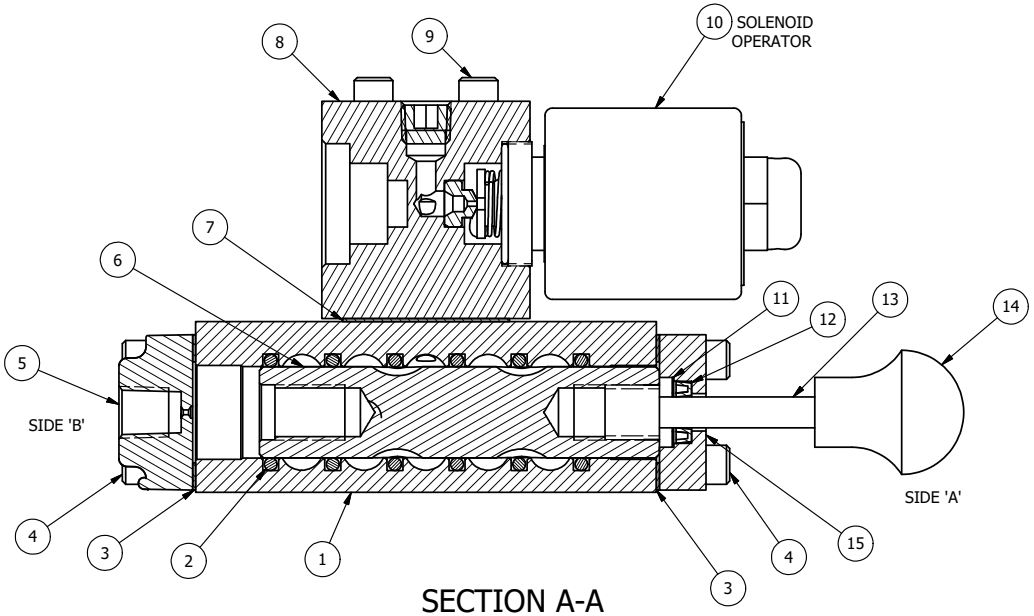

SECTION A-A
VIEW FROM 3 PORT SIDE

FLG	QTY	PART NO	DESCRIPTION
18	2	V-212	SCREW, #2 X 3/16 DRIVE, TYPE U, OVAL HEAD, STAINLESS STEEL
17	1	AN-115	NAMEPLATE, BLANK, FOR HE,KE,RR,D,CR,PP,SR,SS VALVES
16	1	V-19	PLUG, 1/8-27 NPT, 7/8 TAPER, FLUSH SEAL, SOCKET PIPE PLUG W/LOCTITE RED VIBRA-SEAL
15	1	PEC3-5	END CAP, INDICATOR PIN, WIPER CAVITY, 6061-T6, 1/4" & 3/8" VALVE
14	1	V-570	KNOB,BLACK (BRASS 1/4-20 INSERT), OS OPTION
13	1	PIK3	PIN, SPOOL OVERRIDE, 303 STAINLESS, 1/4" & 3/8" VALVES
12	1	V-78	U-CUP, 1/2 X 1/4 X 1/8, NITRILE
11	1	V-119	RING,CIRCULAR PUSH ON TYPE FOR INDICATOR PIN
10	1	AY-38EDL-11	CLASSIC SOLENOID - ISO 4400 DIN, DUST EXCLUDER NUT, 120/60
9	4	V-1	SCREW, 10-24 X 2, SOCKET HEAD CAP
8	1	PB3-1E	ADAPTOR - SINGLE SOLENOID, 1/4" & 3/8" VALVES
7	1	PBG3-1	GASKET - PIGGY BACK, SINGLE SOLENOID, 1/4" & 3/8" VALVE
6	1	S3R	SPOOL - SOLID, STANDARD, 2 POS, CLSD CTR, 1/4" & 3/8" VALVE
5	1	PEC3	END CAP, PILOT, 380 AL, 1/4" & 3/8" VALVE
4	8	V-38	SCREW, 10-24 X 3/4, SOCKET HEAD CAP
3	2	ECG3	GASKET - END CAP, 1/4" & 3/8" VALVE
2	6	V-39	O-RING, VITON, STD BODY, 1/4" & 3/8" VALVES
1	1	B2-6E	BODY - SOLID, PIGGY BACK, ANODIZED, 1/4" SIDE PORT VALVE

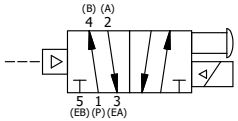

OPERATOR VOLTAGES	
PART NO	REPLACE OPERATOR
SR2EDLOS 12VDC	AY-38EDL-5
SR2EDLOS 24VDC	AY-38EDL-8
SR2EDLOS 240/60	AY-38EDL-17

LIMITS ON DIMENSIONS UNLESS OTHERWISE SPECIFIED
2-PL DECIMAL ± .01
3-PL DECIMAL ± .005
FRACTIONAL ± 1/64
ANGULAR ± 1/2'

AAA PRODUCTS INTERNATIONAL
7114 Harry Hines Blvd
Dallas, TX 75235

DRAWN: RMcKenna	DATE: 3/1/2025	CHECKED: KWaite	DATE: 3/1/2025
SCALE: 1 : 1	SHEET: 1 OF 1	RELEASED: HWomack	DATE: 3/1/2025

TITLE:
1/4" SIDE PORT, SNGL SOL, 2 POS, PILOT RTRN, ISO 4400, 120/60, DUST EXCLDR, MAN SPL OVRD

PART NO.: SR2EDLOS

REV.:

D:\Engineering\Product\Valves\Assembly\classic\SR2EDLOS.dw

THE INFORMATION CONTAINED WITHIN THIS DOCUMENT IS PROPRIETARY TO AAA PRODUCTS AND MAY NOT BE DISCLOSED WITHOUT PRIOR WRITTEN CONSENT