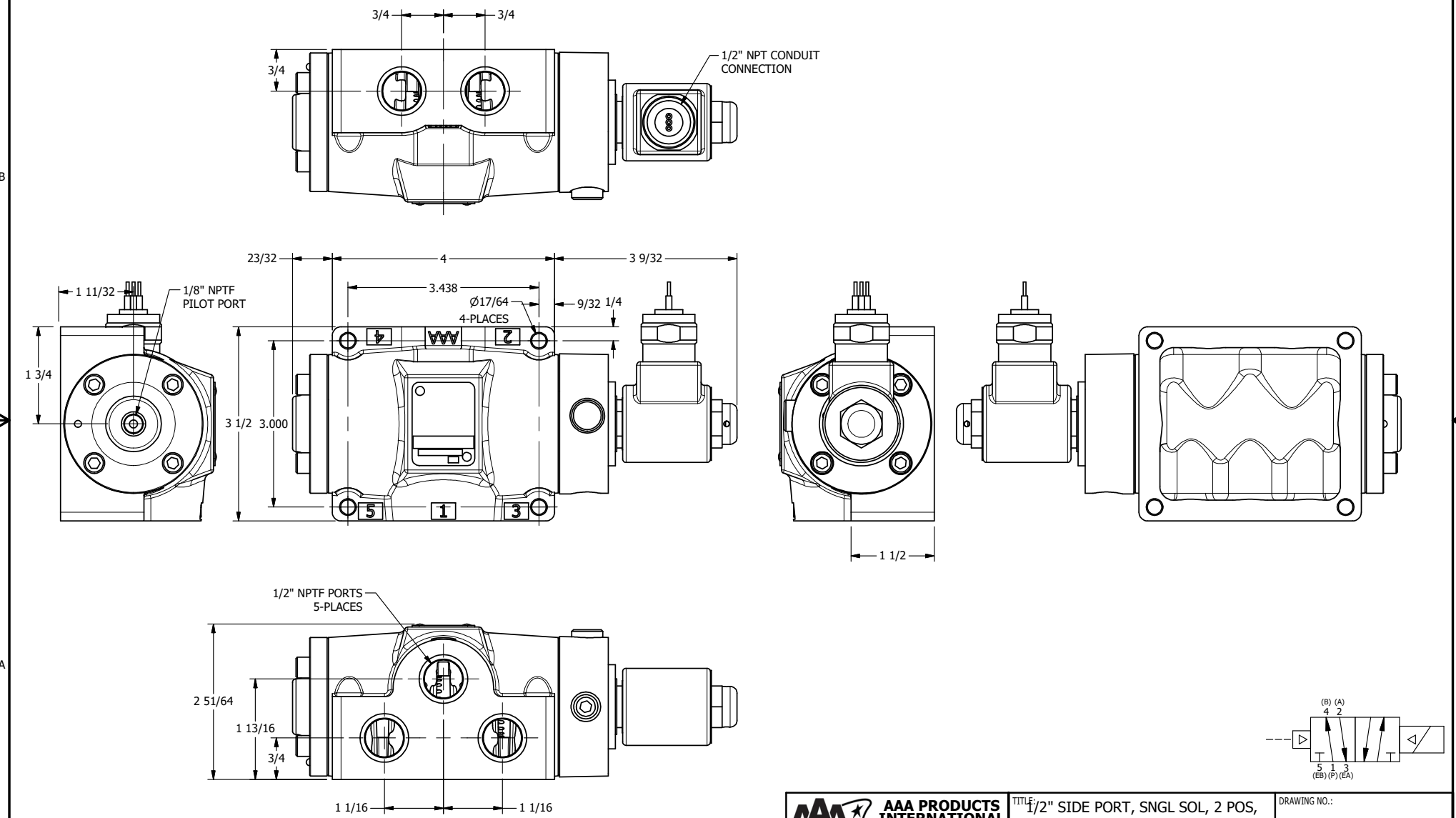

AAA PRODUCTS INTERNATIONAL
7114 Harry Hines Blvd
Dallas, TX 75235

TITLE: 1/2" SIDE PORT, SNGL SOL, 2 POS, PILOT RTRN, MOLD-OVER, PUSH OVRD, DUST EXCLDR

DRAWING NO.: DIM_SR4MOPL

THE INFORMATION CONTAINED WITHIN THIS DOCUMENT IS PROPRIETARY TO AAA PRODUCTS AND MAY NOT BE DISCLOSED WITHOUT PRIOR WRITTEN CONSENT