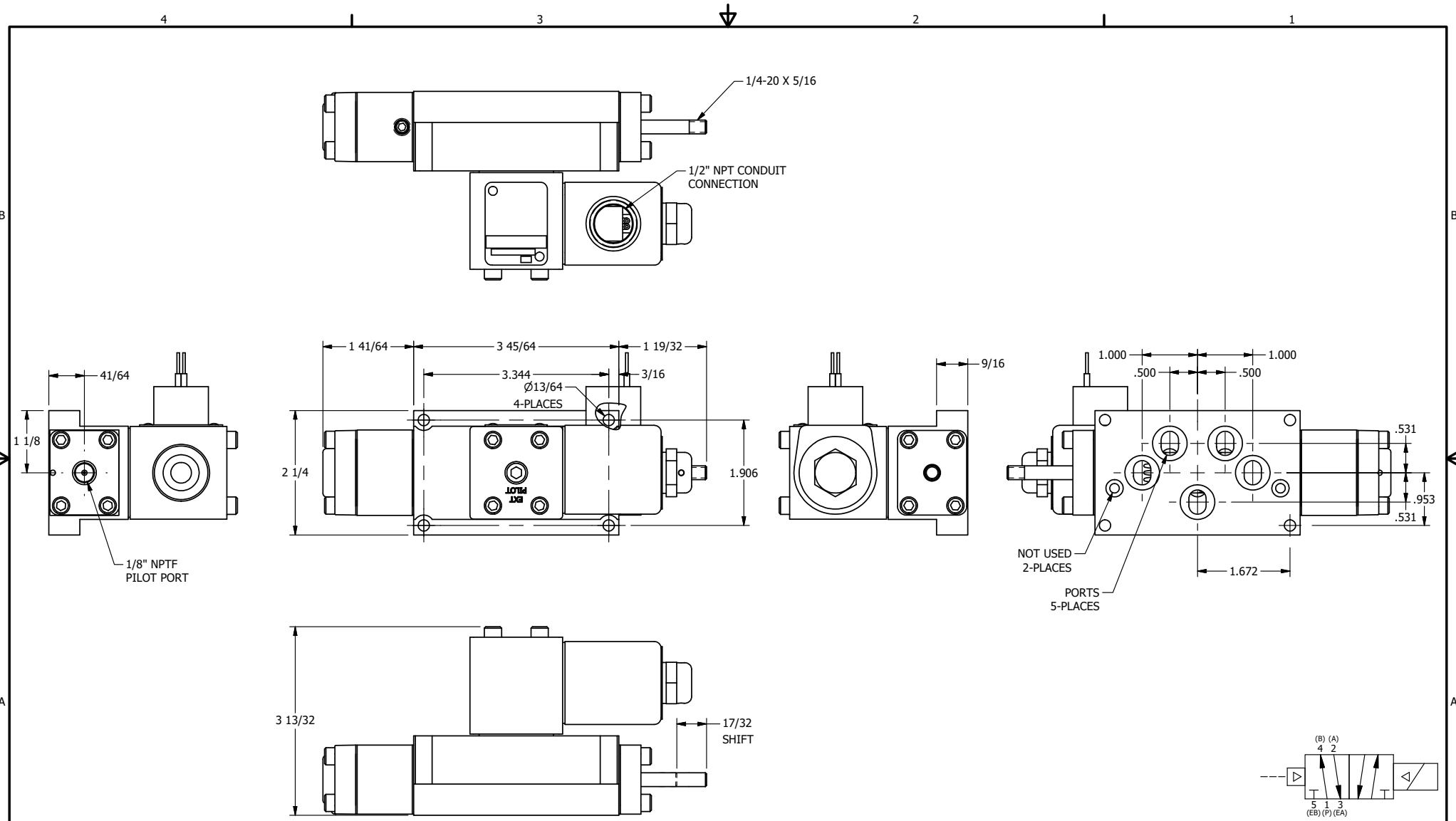

AAA PRODUCTS INTERNATIONAL
7114 Harry Hines Blvd
Dallas, TX 75235

TITLE: 3/8" SUBPLATE, SNGL SOL, 2 POS, DTNT, PLT RTRN, CLASSIC, DUST EXCLDR, THD INDCTR PIN

DRAWING NO.: DIM_SR3PLKQ

THE INFORMATION CONTAINED WITHIN THIS DOCUMENT IS PROPRIETARY TO AAA PRODUCTS AND MAY NOT BE DISCLOSED WITHOUT PRIOR WRITTEN CONSENT