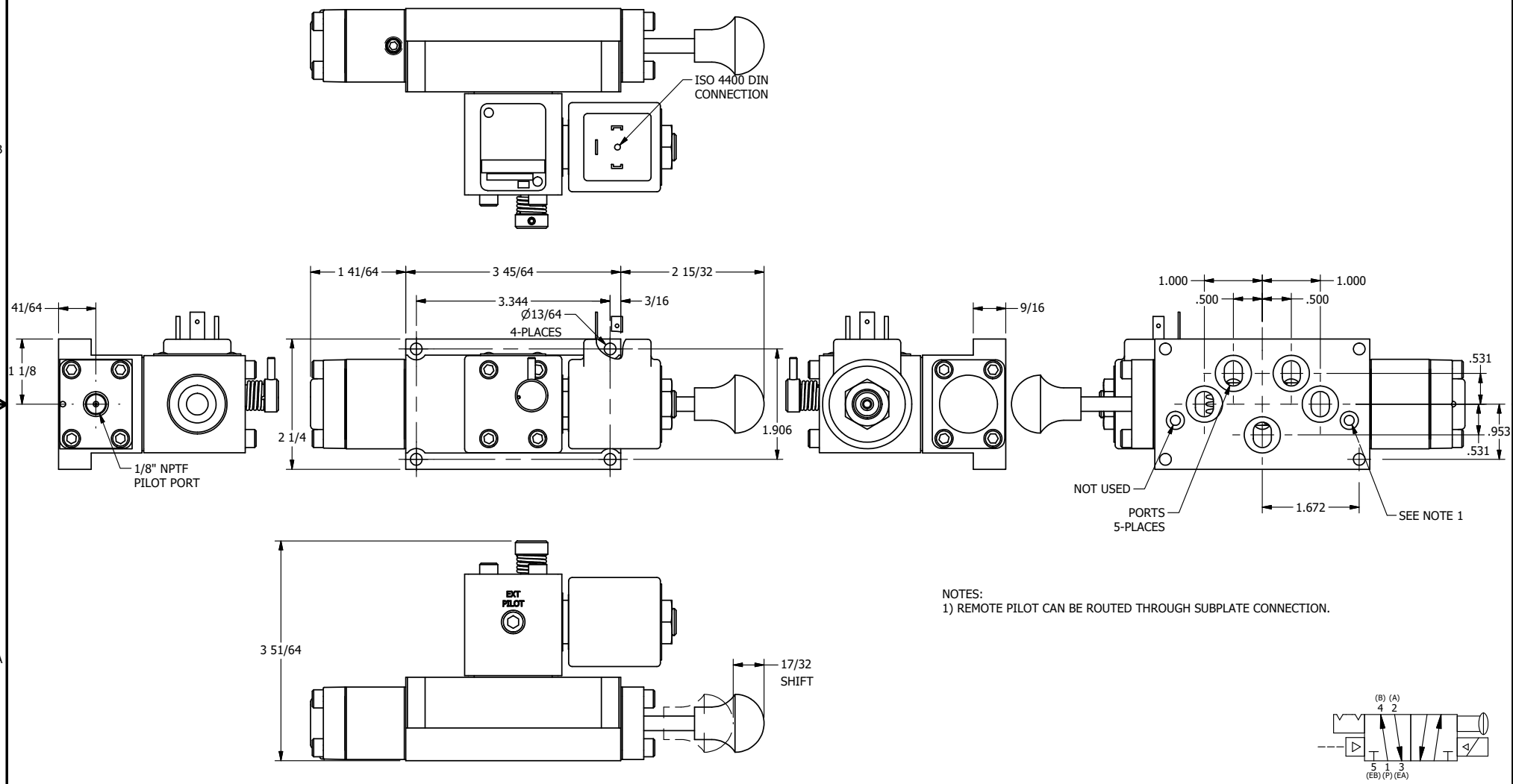

NOTES:
1) REMOTE PILOT CAN BE ROUTED THROUGH SUBPLATE CONNECTION.

AAA PRODUCTS INTERNATIONAL 7114 Harry Hines Blvd Dallas, TX 75235	TITLE: 3/8" SUBPLATE, SNGL SOL, 2 POS, DTNT, PLT RTRN, ISO 4400, NON-LCKNG OVRD, MAN SPL OVRD	DRAWING NO.: DIM_SR3PEDONOSQ

THE INFORMATION CONTAINED WITHIN THIS DOCUMENT IS PROPRIETARY TO AAA PRODUCTS AND MAY NOT BE DISCLOSED WITHOUT PRIOR WRITTEN CONSENT