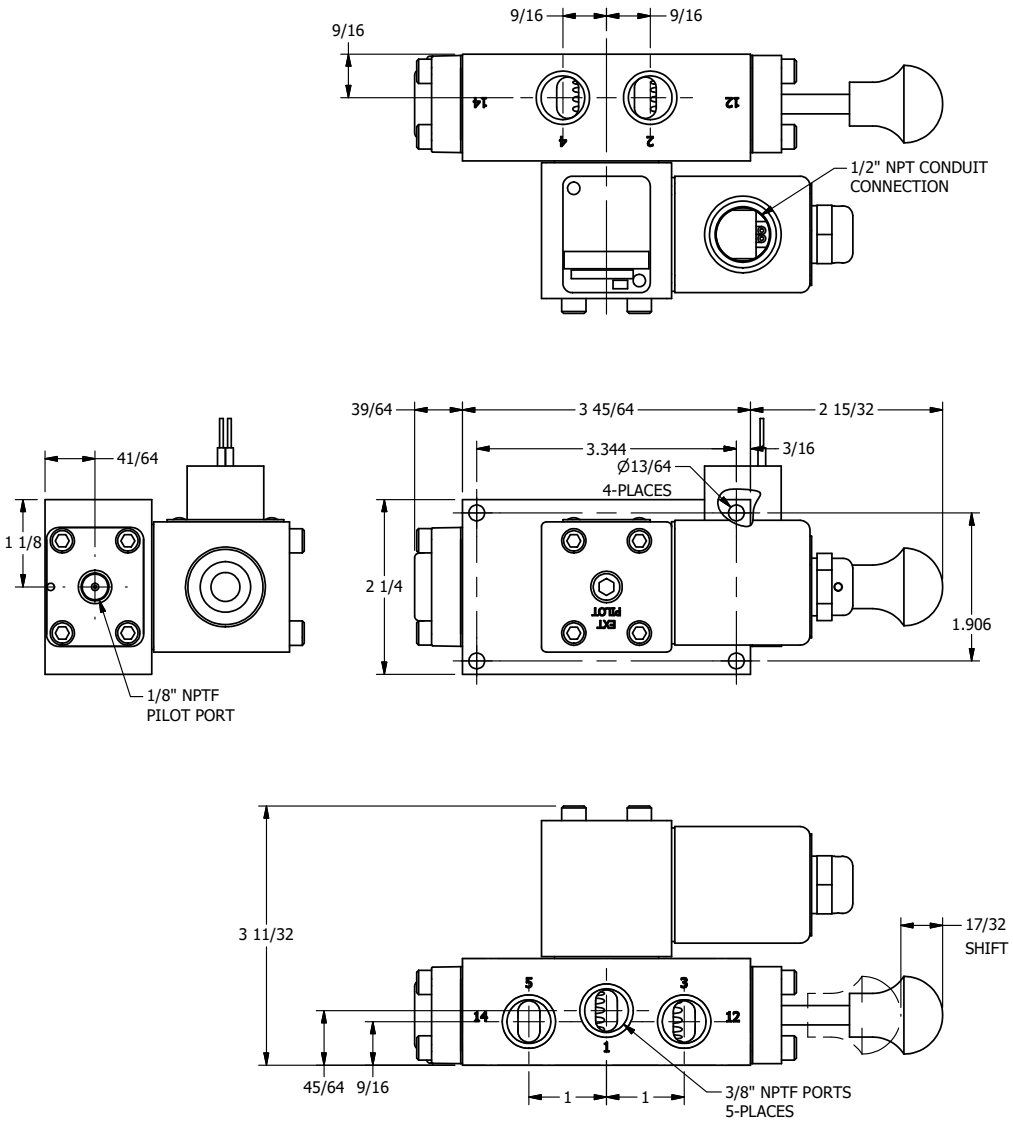

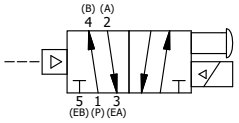

AAA PRODUCTS INTERNATIONAL
7114 Harry Hines Blvd
Dallas, TX 75235

TITLE: 3/8" SIDE PORT, SNGL SOL, 2 POS, PILOT RTRN, CLASSIC, DUST EXCLDR, MAN SPL OVRD

DRAWING NO.: DIM_SR3LOS

THE INFORMATION CONTAINED WITHIN THIS DOCUMENT IS PROPRIETARY TO AAA PRODUCTS AND MAY NOT BE DISCLOSED WITHOUT PRIOR WRITTEN CONSENT