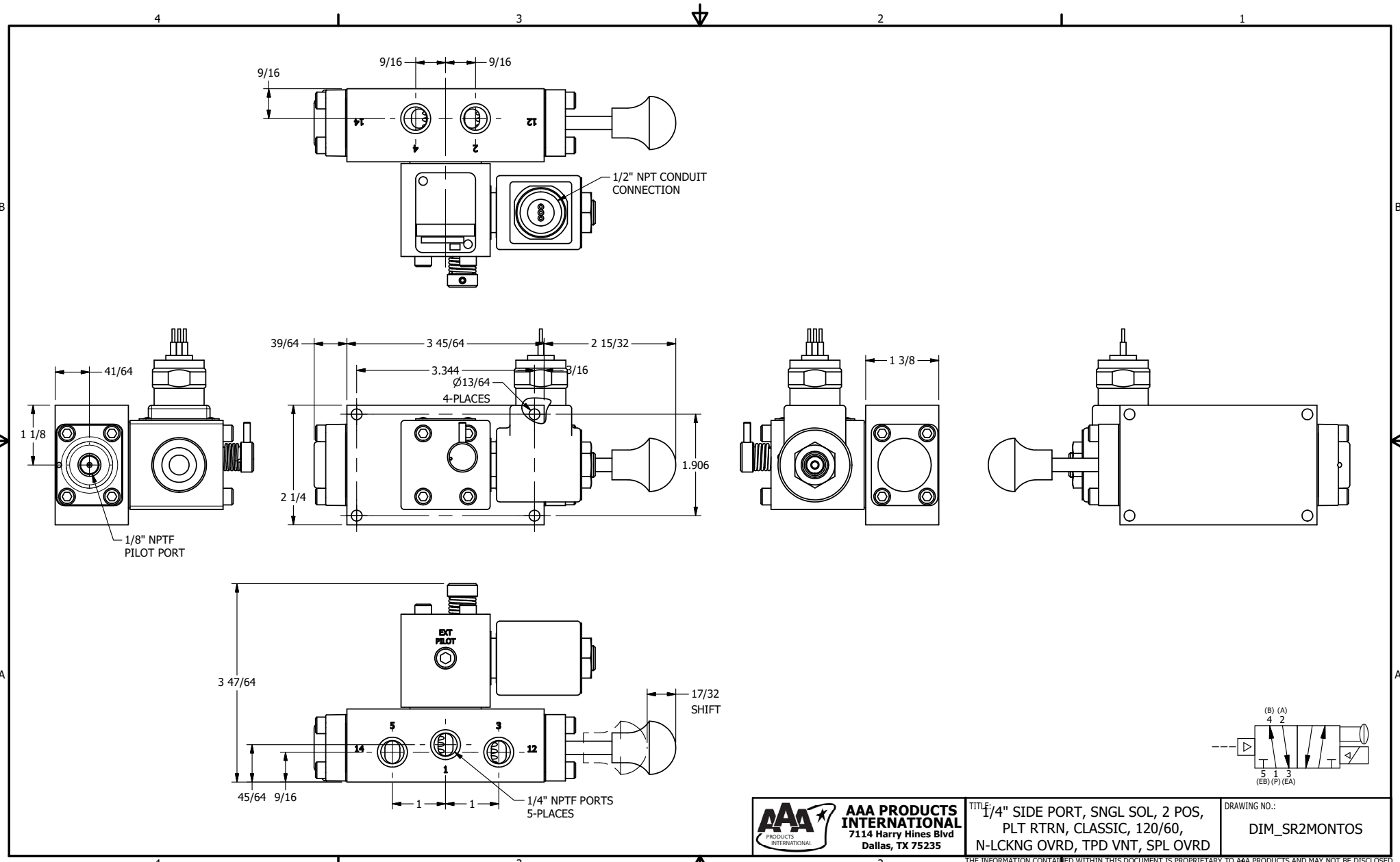

AAA PRODUCTS INTERNATIONAL
7114 Harry Hines Blvd
Dallas, TX 75235

TITLE: 1/4" SIDE PORT, SNGL SOL, 2 POS, PLT RTRN, CLASSIC, 120/60, N-LCKNG OVRD, TPD VNT, SPL OVRD

DRAWING NO.: DIM_SR2MONTOS

THE INFORMATION CONTAINED WITHIN THIS DOCUMENT IS PROPRIETARY TO AAA PRODUCTS AND MAY NOT BE DISCLOSED WITHOUT PRIOR WRITTEN CONSENT