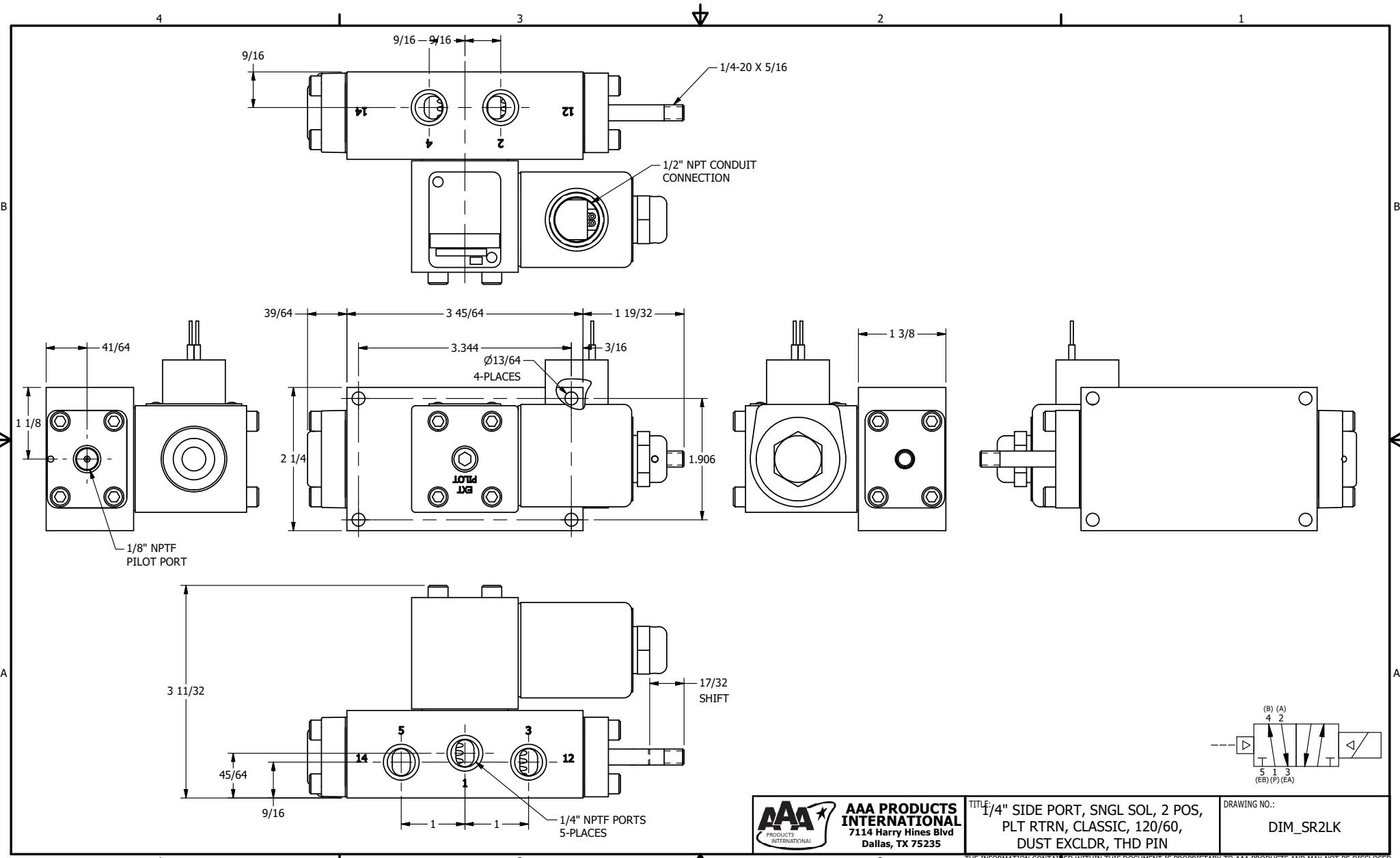

AAA PRODUCTS INTERNATIONAL 7114 Harry Hines Blvd Dallas, TX 75235	TITLE: 1/4" SIDE PORT, SNGL SOL, 2 POS, PLT RTRN, CLASSIC, 120/60, DUST EXCLDR, THD PIN	DRAWING NO.: DIM_SR2LK

THE INFORMATION CONTAINED WITHIN THIS DOCUMENT IS PROPRIETARY TO AAA PRODUCTS AND MAY NOT BE DISCLOSED WITHOUT PRIOR WRITTEN CONSENT