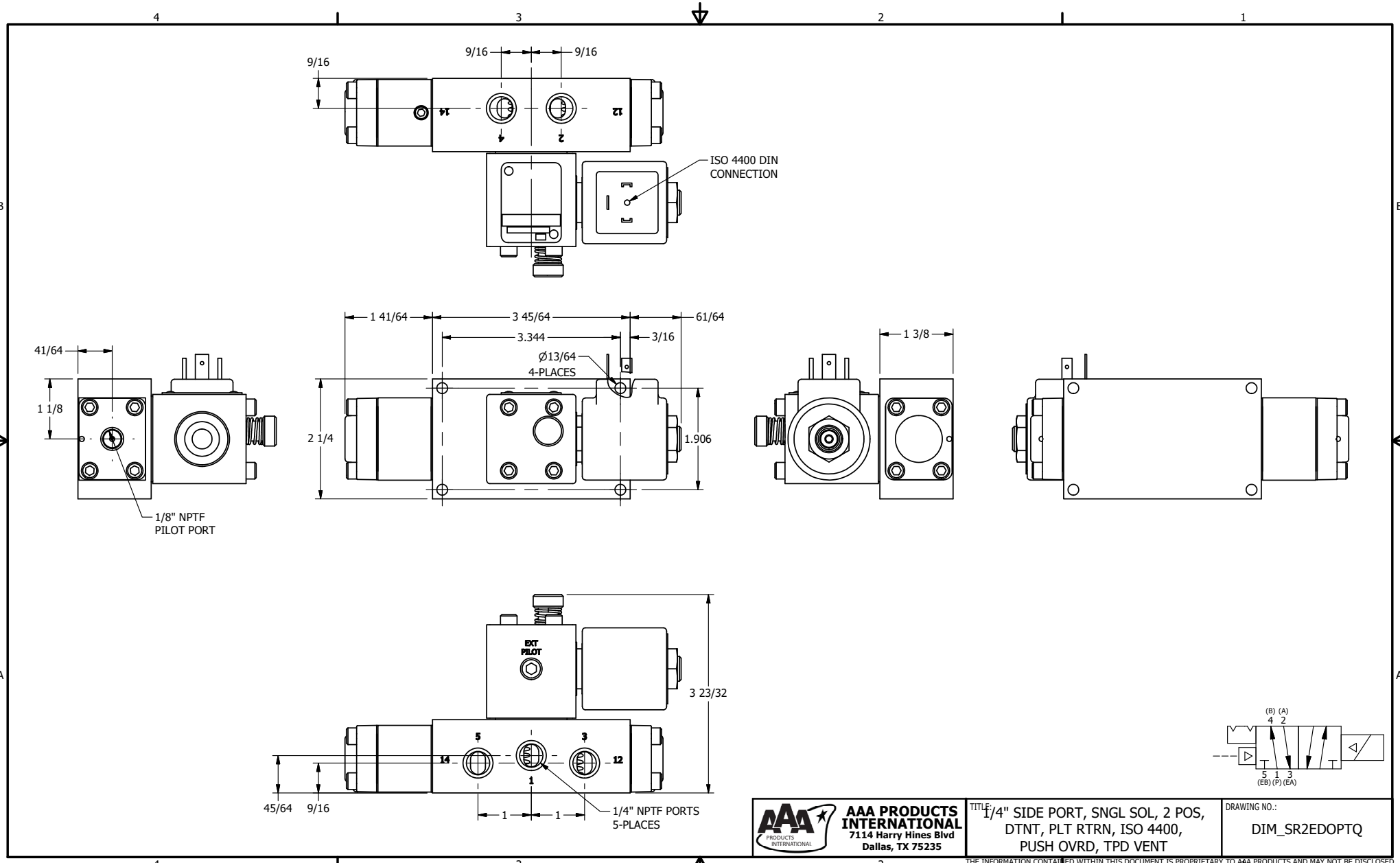

AAA PRODUCTS INTERNATIONAL
7114 Harry Hines Blvd
Dallas, TX 75235

TITLE: 1/4" SIDE PORT, SNGL SOL, 2 POS, DTNT, PLT RTRN, ISO 4400, PUSH OVRD, TPD VENT

DRAWING NO.: DIM_SR2EDOPTQ

THE INFORMATION CONTAINED WITHIN THIS DOCUMENT IS PROPRIETARY TO AAA PRODUCTS AND MAY NOT BE DISCLOSED WITHOUT PRIOR WRITTEN CONSENT