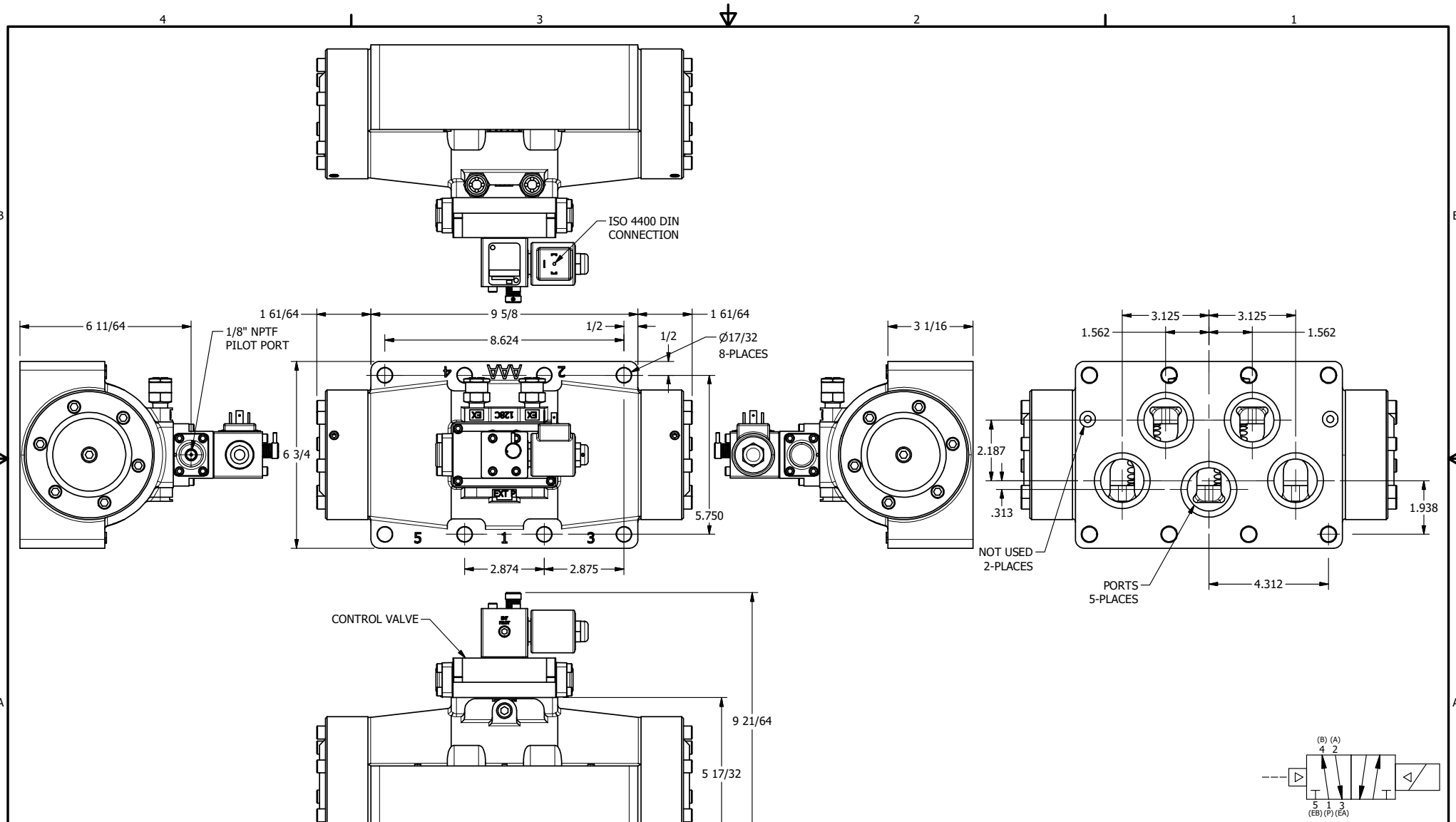

AAA PRODUCTS INTERNATIONAL
7114 Harry Hines Blvd
Dallas, TX 75235

TITLE: 2" SUBPLATE, SNGL SOL, 2 POS, FRICTION POS, PILOT RTRN, ISO 44OO DIN, NON-LCKNG OVRD

DRAWING NO.: DIM_SR16PEDONL

THE INFORMATION CONTAINED WITHIN THIS DOCUMENT IS PROPRIETARY TO AAA PRODUCTS AND MAY NOT BE DISCLOSED WITHOUT PRIOR WRITTEN CONSENT