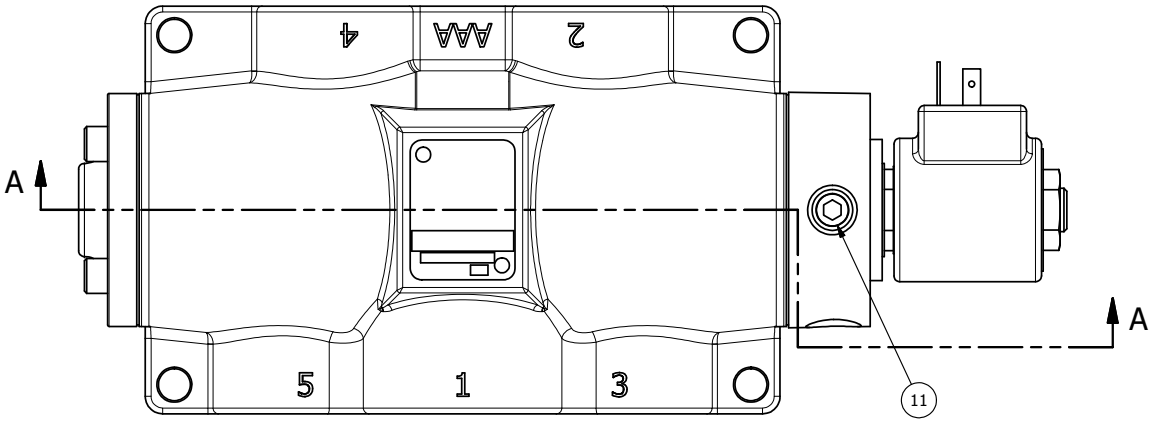


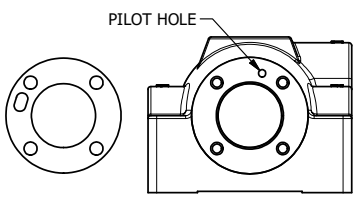


POSITION GASKET ON END OF VALVE SO GASKET COVERS PILOT HOLE, SIDE 'B' ONLY

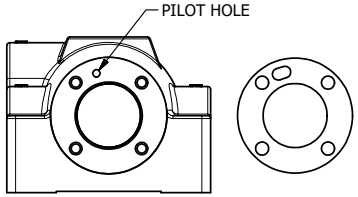


ALIGN PILOT AND HOLE IN GASKET, SIDE 'A' ONLY FOR EXTERNAL PILOT OPERATION - ROTATE THE ROUND ALUMINUM ADAPTOR 90 OR 180 DEGREES. REMOVE 1/8" NPTF PLUG AND SUPPLY 50-160 PSI TO 1/8" NPTF PILOT PORT IN ADAPTOR.

NOTES:
1) ALWAYS GIVE VALVE MODEL AND PART NUMBER WHEN ORDERING PARTS.
2) FOR DIFFERENT VOLTAGES OTHER THAN 120/60, REPLACE SOLENOID OPERATOR WITH OPERATOR LISTED IN TABLE BELOW. REFERENCE AY-38ED DRAWING FOR REPLACEMENT COILS.

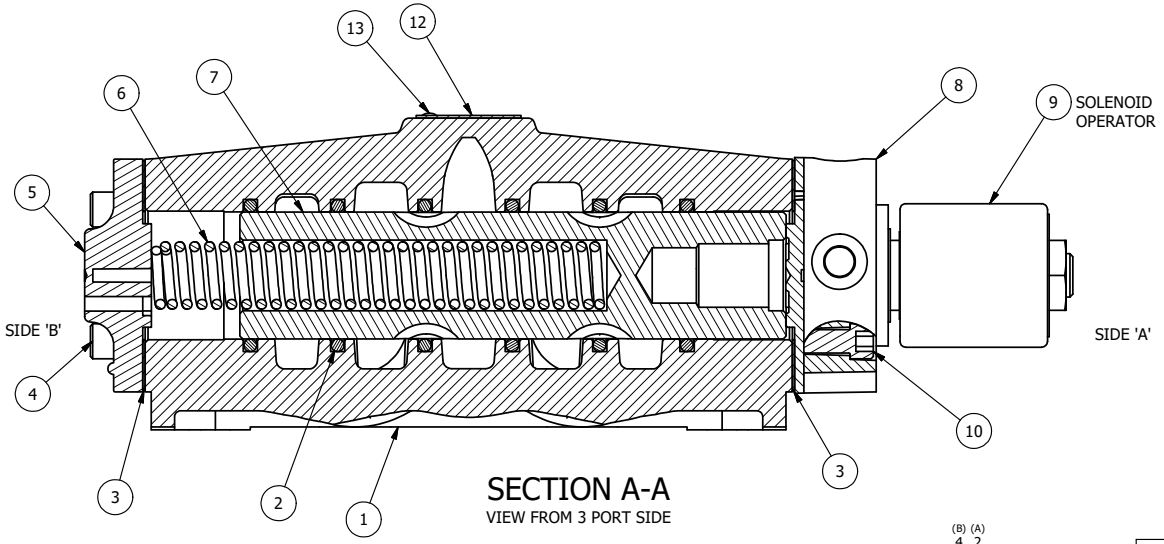


SECTION A-A
VIEW FROM 3 PORT SIDE

| FLG | QTY | PART NO | DESCRIPTION |
|---|---|---|---|
| 13 | 2 | V-212 | SCREW, #2 X 3/16 DRIVE, TYPE U, OVAL HEAD, STAINLESS STEEL |
| 12 | 1 | AN-114 | NAMEPLATE, BLANK, FOR VALVES WITH SPRINGS OR DETENTS |
| 11 | 1 | V-19 | PLUG, SOCKET PIPE 1/8" NPT (#601-3 PITTSBURG PLUG PART #.) |
| 10 | 4 | V-47 | SCREW, 1/4-20 X 1, SOCKET HEAD CAP |
| 9 | 1 | AY-38EDT-11 | CLASSIC SOLENOID - ISO 4400 DIN, 1/8" NPTF SOL EXHST, 120/60 |
| 8 | 1 | SSA48 | ADAPTOR, SOLENOID, 1/2", 3/4" & 1" VALVE |
| 7 | 1 | S8 | SPOOL - STANDARD, 2 POS, CLSD CTR, 3/4" & 1" VALVE |
| 6 | 1 | CS8 | SPRING - RETURN, 3/4" & 1" VALVES |
| 5 | 1 | PEC48-3 | END CAP, VENTED, 380 AL, 1/2", 3/4" & 1" VALVES |
| 4 | 4 | V-46 | SCREW, 1/4-20 X 3/4, SOCKET HEAD CAP |
| 3 | 2 | ECG48 | GASKET - END CAP, 1/2", 3/4" & 1" VALVE |
| 2 | 6 | V-30 | O-RING, BUNA-N, 70 DURO, AS-220, (REF 1-3/8 X 1-5/8 X 1/8), 3/4" & 1" VALVES |
| 1 | 1 | B8-1 | BODY, 1" SIDE PORT, UPPER PILOTS, ANODIZED |

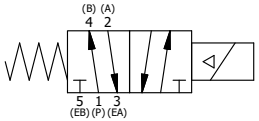


| OPERATOR VOLTAGES | |
|---|---|
| PART NO | REPLACE OPERATOR |
| SO8EDT 240/60 | AY-38EDT-17 |
| SO8EDT 24VDC | AY-38EDT-8 |
| SO8EDT 12VDC | AY-38EDT-5 |

LIMITS ON DIMENSIONS UNLESS OTHERWISE SPECIFIED
2-PL DECIMAL ± .01
3-PL DECIMAL ± .005
FRACTIONAL ± 1/64
ANGULAR ± 1/2'


AAA PRODUCTS INTERNATIONAL
7114 Harry Hines Blvd
Dallas, TX 75235


DRAWN: RMcKenna DATE: 12/13/2015
CHECKED: KWaite DATE: 12/13/2015
SCALE: 3/4 SHEET: 1 OF 1
RELEASED: HWomack DATE: 12/13/2015

TITLE:
1" SIDE PORT, SNGL SOL, 2 POS, SPRING RTRN, ISO 4400 DIN, 120/60, 1/8" NPTF SOL VENT

PART NO.: SO8EDT
REV.:


THE INFORMATION CONTAINED WITHIN THIS DOCUMENT IS PROPRIETARY TO AAA PRODUCTS AND MAY NOT BE DISCLOSED WITHOUT PRIOR WRITTEN CONSENT


D:\Engineering\Product\Valve\Assembly\Classic\SO8\SO8ED1.idw