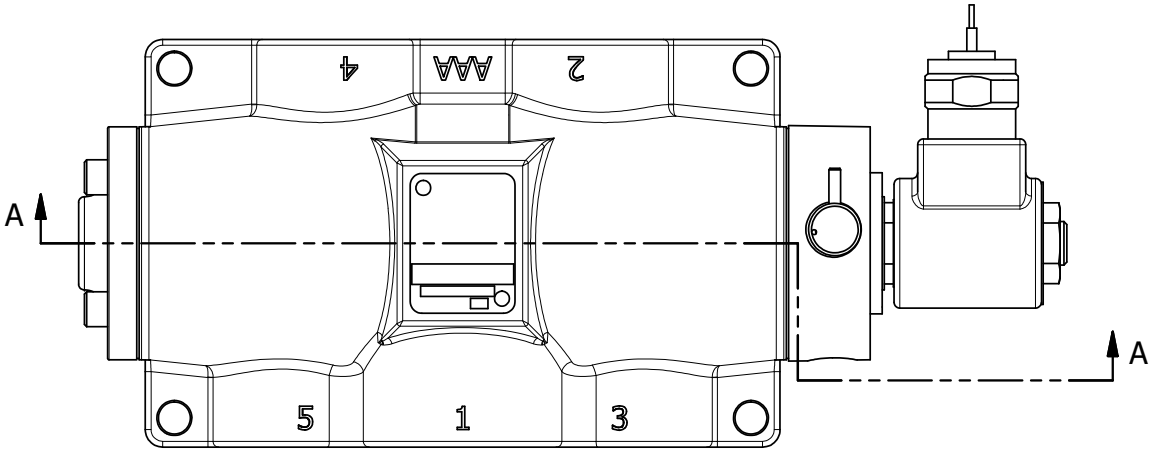

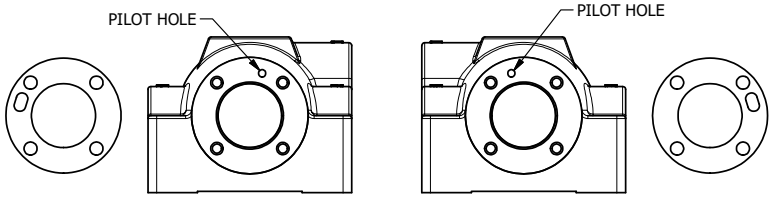

POSITION GASKET ON END OF VALVE SO GASKET COVERS PILOT HOLE, SIDE 'B' ONLY

POSITION GASKET TO SEAL PILOT HOLE, BOTH SIDES. THE ROUND ALUMINUM ADAPTOR IS ROTATED 90 DEGREES. SUPPLY 50-160 PSI TO 1/8" NPTF PILOT PORT IN ADAPTOR.

NOTES:
1) ALWAYS GIVE VALVE MODEL AND PART NUMBER WHEN ORDERING PARTS.
2) FOR DIFFERENT VOLTAGES OTHER THAN 120/60, REPLACE SOLENOID OPERATOR WITH OPERATOR LISTED IN TABLE BELOW. REFERENCE AY-38M DRAWING FOR REPLACEMENT COILS.

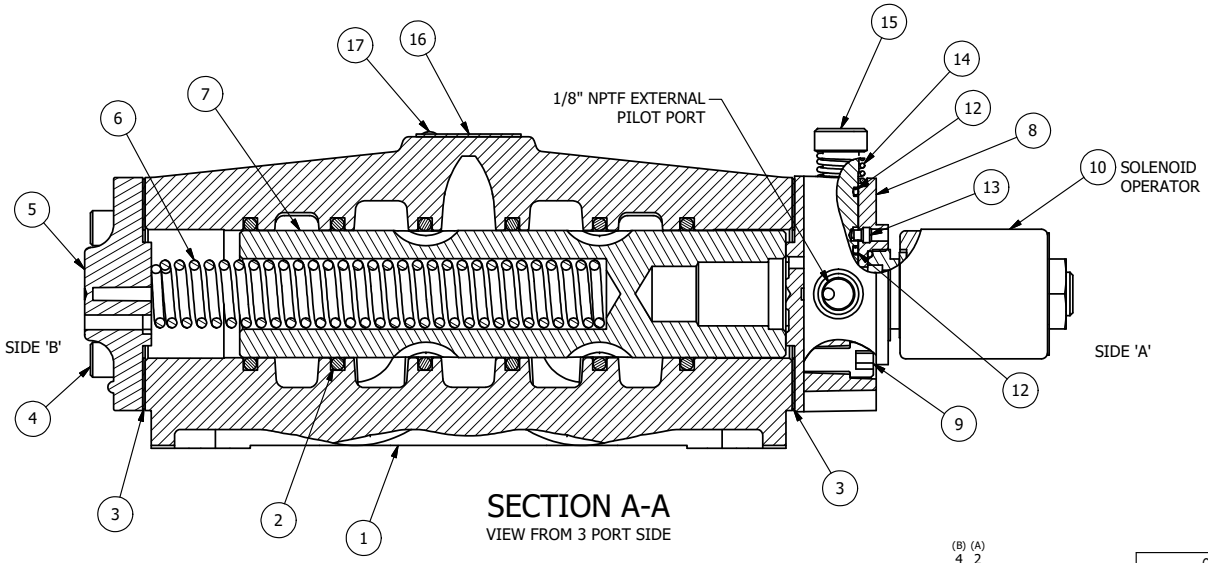

SECTION A-A
VIEW FROM 3 PORT SIDE

FLG	QTY	PART NO	DESCRIPTION
17	2	V-212	SCREW, #2 X 3/16 DRIVE, TYPE U, OVAL HEAD, STAINLESS STEEL
16	1	AN-114	NAMEPLATE, BLANK, FOR VALVES WITH SPRINGS OR DETENTS
15	1	OP4-W	OVERRIDE PIN, SPRING RETURN, 1/2", 3/4" & 1" VALVE
14	1	OS3W	SPRING - OVERRIDE RETURN, "CLASSIC" SOLENOID
13	1	V-81	SCREW, 8-32 X 5/16, SOCKET SET, FULL DOG POINT
12	2	V-85	O-RING, BUNA-N, 70 DURO, AS-010, (REF 1/4 X 3/8 X 1/16), CLASSIC OVRD
10	1	AY-38M-11	CLASSIC SOLENOID - 1/2" NPT CONDUIT, 120/60
9	4	V-47	SCREW, 1/4-20 X 1, SOCKET HEAD CAP
8	1	SSA48-OW	ADAPTOR, 'A' SIDE, CLASSIC SOL., NON-LOCKING OVERRIDE, 1/2", 3/4" & 1" VALVE
7	1	S8	SPOOL - STANDARD, 2 POS, CLSD CTR, 3/4" & 1" VALVE
6	1	CS8	SPRING - RETURN, 3/4" & 1" VALVES
5	1	PEC48-3	END CAP, VENTED, 380 AL, 1/2", 3/4" & 1" VALVES
4	4	V-46	SCREW, 1/4-20 X 3/4, SOCKET HEAD CAP
3	2	ECG48	GASKET - END CAP, 1/2", 3/4" & 1" VALVE
2	6	V-30	O-RING, BUNA-N, 70 DURO, AS-220, (REF 1-3/8 X 1-5/8 X 1/8), 3/4" & 1" VALVES
1	1	B6-1	BODY, 3/4" SIDE PORT, UPPER PILOTS, ANODIZED

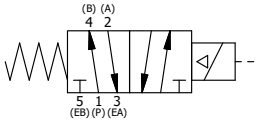

OPERATOR VOLTAGES	
PART NO	REPLACE OPERATOR
SO6MONZ 12VDC	AY-38M-5
SO6MONZ 24VDC	AY-38M-8
SO6MONZ 240/60	AY-38M-17

LIMITS ON DIMENSIONS UNLESS OTHERWISE SPECIFIED
2-PL DECIMAL ± .01
3-PL DECIMAL ± .005
FRACTIONAL ± 1/64
ANGULAR ± 1/2'

AAA PRODUCTS INTERNATIONAL
7114 Harry Hines Blvd
Dallas, TX 75235

DRAWN: RMcKenna DATE: 1/18/2020
CHECKED: KWaite DATE: 1/18/2020
SCALE: 3/4 SHEET: 1 OF 1
RELEASED: HWomack DATE: 1/18/2020

TITLE: 3/4" SIDE PORT, SNGL SOL, 2 POS, SPRING RTRN, MOLD-OVER, 120/60, NON-LCKNG OVRD, EXT PILOT

PART NO.: SO6MONZ

REV.:

THE INFORMATION CONTAINED WITHIN THIS DOCUMENT IS PROPRIETARY TO AAA PRODUCTS AND MAY NOT BE DISCLOSED WITHOUT PRIOR WRITTEN CONSENT

D:\Engineering\Product\Valve\Assembly\Classic\SO6\SO6MONZ.dw