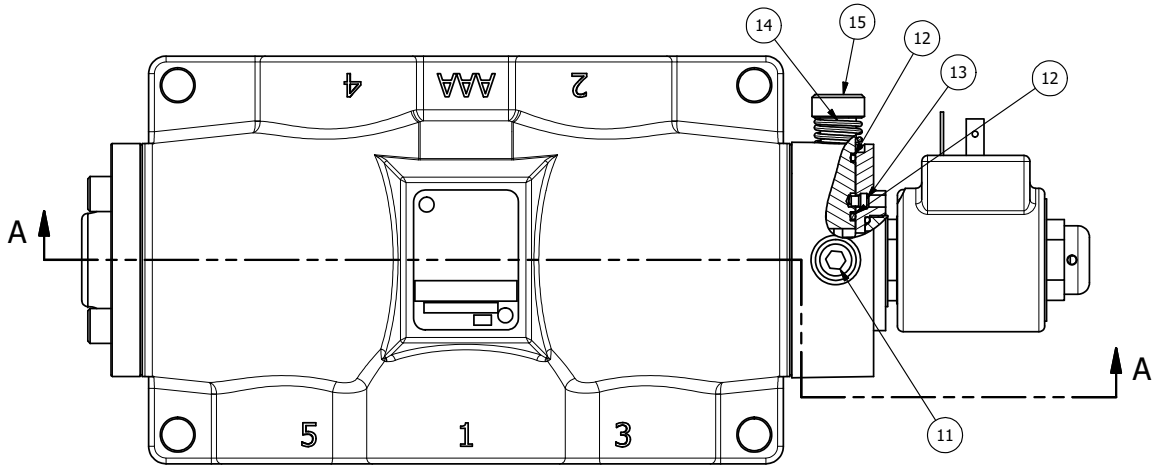

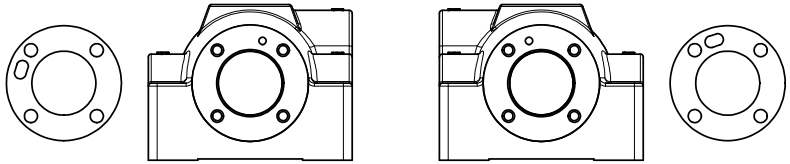

POSITION GASKET ON END OF VALVE SO GASKET COVERS PILOT HOLE, SIDE 'B' ONLY

ALIGN PILOT AND HOLE IN GASKET, SIDE 'A' ONLY FOR EXTERNAL PILOT OPERATION - ROTATE ADAPTOR AND GASKET 90 DEGREES. REMOVE V-19 PLUG AND SUPPLY 50-160 PSI TO ADAPTOR.

NOTES:
1) ALWAYS GIVE VALVE MODEL AND PART NUMBER WHEN ORDERING PARTS.
2) FOR DIFFERENT VOLTAGES OTHER THAN 120/60, REPLACE SOLENOID OPERATOR WITH OPERATOR LISTED IN TABLE BELOW. REFERENCE AY-38EDL DRAWING FOR REPLACEMENT COILS.

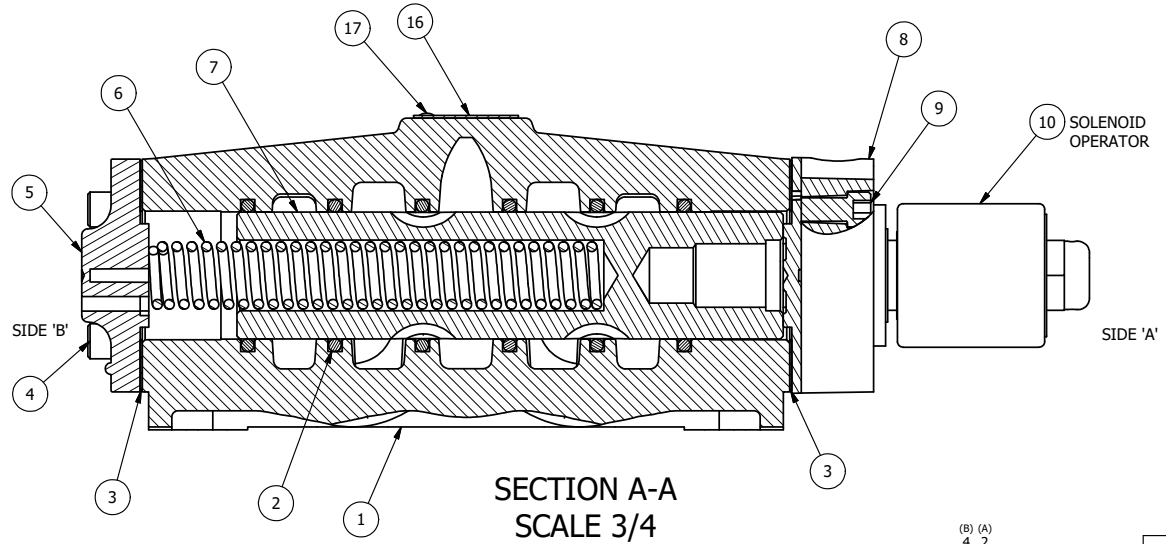

SECTION A-A
SCALE 3/4

FLG	QTY	PART NO	DESCRIPTION
17	2	V-212	SCREW, #2 X 3/16 DRIVE, TYPE U, OVAL HEAD, STAINLESS STEEL
16	1	AN-114	NAMEPLATE, BLANK, FOR VALVES WITH SPRINGS OR DETENTS
15	1	OP4-W	OVERRIDE PIN, SPRING RETURN, 1/2", 3/4" & 1" VALVE
14	1	OS3W	SPRING - OVERRIDE RETURN, "CLASSIC" SOLENOID
13	1	V-81	SCREW, 8-32 X 5/16, SOCKET SET, FULL DOG POINT
12	2	V-85	O-RING, BUNA-N, 70 DURO, AS-010, (REF 1/4 X 3/8 X 1/16), CLASSIC OVRD
11	1	V-19	PLUG, SOCKET PIPE 1/8" NPT (#601-3 PITTSBURG PLUG PART #.)
10	1	AY-38EDL-11	CLASSIC SOLENOID - ISO 4400 DIN, DUST EXCLUDER NUT, 120/60
9	4	V-47	SCREW, 1/4-20 X 1, SOCKET HEAD CAP
8	1	SSA48-OW	ADAPTOR, 'A' SIDE, CLASSIC SOL., NON-LOCKING OVERRIDE, 1/2", 3/4" & 1" VALVE
7	1	S8	SPOOL - STANDARD, 2 POS, CLSD CTR, 3/4" & 1" VALVE
6	1	CS8	SPRING - RETURN, 3/4" & 1" VALVES
5	1	PEC48-3	END CAP, VENTED, 380 AL, 1/2", 3/4" & 1" VALVES
4	4	V-46	SCREW, 1/4-20 X 3/4, SOCKET HEAD CAP
3	2	ECG48	GASKET - END CAP, 1/2", 3/4" & 1" VALVE
2	6	V-30	O-RING, BUNA-N, 70 DURO, AS-220, (REF 1-3/8 X 1-5/8 X 1/8), 3/4" & 1" VALVES
1	1	B6-1	BODY, 3/4" SIDE PORT, UPPER PILOTS, ANODIZED

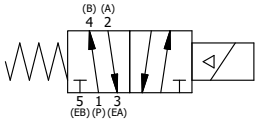

OPERATOR VOLTAGES	
PART NO	REPLACE OPERATOR
SO6EDONL 12VDC	AY-38EDL-5
SO6EDONL 24VDC	AY-38EDL-8
SO6EDONL 240/60	AY-38EDL-17

LIMITS ON DIMENSIONS UNLESS OTHERWISE SPECIFIED
2-PL DECIMAL ± .01
3-PL DECIMAL ± .005
FRACTIONAL ± 1/64
ANGULAR ± 1/2'

AAA PRODUCTS INTERNATIONAL
7114 Harry Hines Blvd
Dallas, TX 75235

DRAWN: RMcKenna	DATE: 1/8/2020	CHECKED: KWaite	DATE: 1/8/2020
SCALE: 3/4	SHEET: 1 OF 1	RELEASED: HWomack	DATE: 1/8/2020

TITLE: 3/4" SIDE PORT, SNGL SOL, 2 POS, SPRING RTRN, ISO 4400 DIN, 120/60, NON-LCKNG OVRD, DUST EXCLDR

PART NO.: SO6EDONL

REV.:

THE INFORMATION CONTAINED WITHIN THIS DOCUMENT IS PROPRIETARY TO AAA PRODUCTS AND MAY NOT BE DISCLOSED WITHOUT PRIOR WRITTEN CONSENT

D:\Engineering\Product\Valve\Assembly\Classic\SO6EDONL.dw