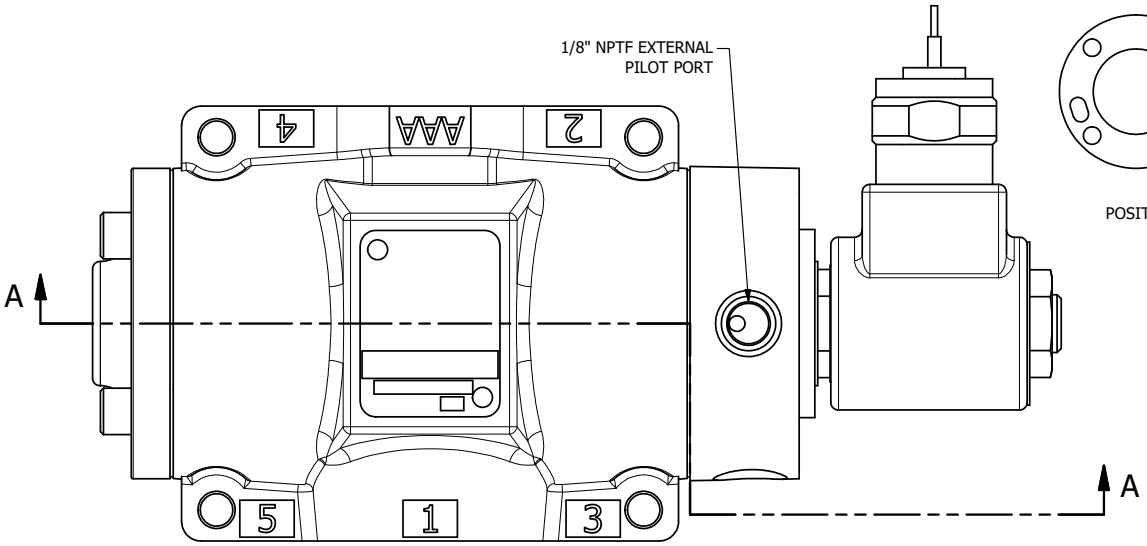

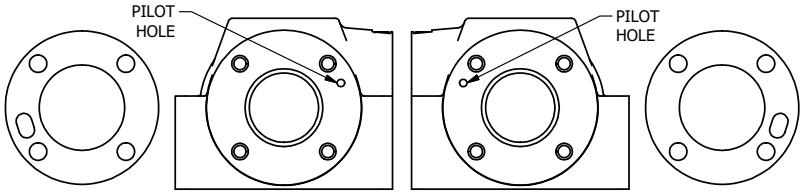

POSITION GASKET TO SEAL PILOT HOLE
SIDE 'B' ONLY.

POSITION GASKET TO SEAL PILOT HOLE, BOTH SIDES.
THE ROUND ALUMINUM ADAPTOR IS ROTATED 90 DEGREES.
SUPPLY 50-160 PSI TO 1/8" NPTF PILOT PORT IN ADAPTOR.

NOTES:
1) ALWAYS GIVE VALVE MODEL AND PART NUMBER WHEN ORDERING PARTS.
2) FOR DIFFERENT VOLTAGES OTHER THAN 120/60, REPLACE SOLENOID OPERATOR WITH OPERATOR LISTED IN TABLE BELOW. REFERENCE AY-38M DRAWING FOR REPLACEMENT COILS.

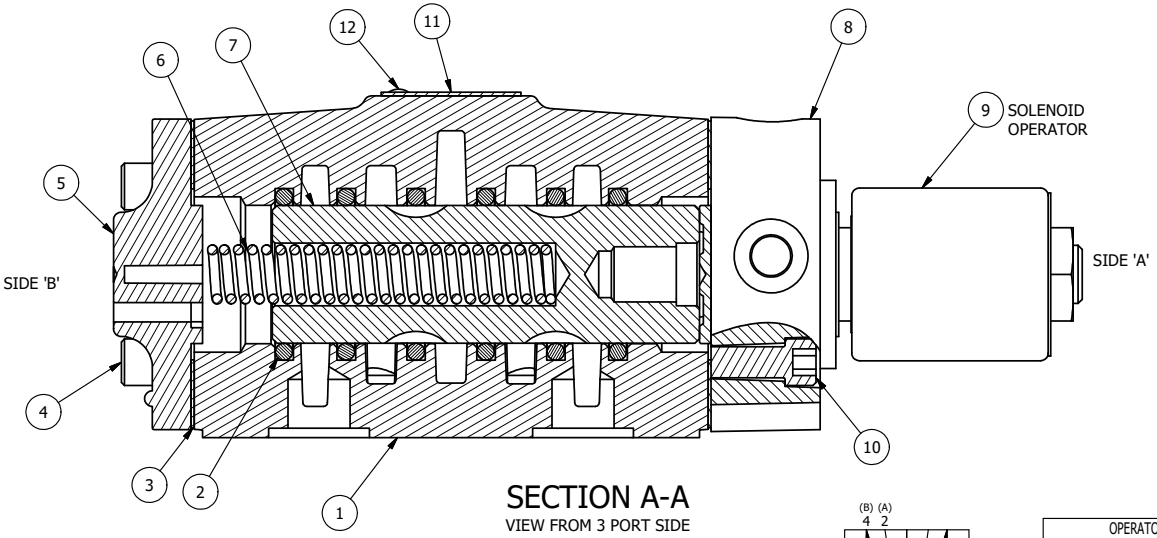

SECTION A-A
VIEW FROM 3 PORT SIDE

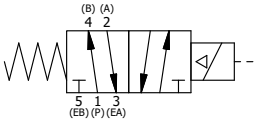

OPERATOR VOLTAGES	
PART NO	REPLACE OPERATOR
SO4PMZ 240/60	AY-38M-17
SO4PMZ 24VDC	AY-38M-8
SO4PMZ 12VDC	AY-38M-5

FLG	QTY	PART NO	DESCRIPTION
13	1	SPK-4	KIT - SUBPLATE MOUNT, 1/2" SUBPLATE VALVES
12	2	V-212	SCREW, #2 X 3/16 DRIVE, TYPE U, OVAL HEAD, STAINLESS STEEL
11	1	AN-114	NAMEPLATE, BLANK, FOR VALVES WITH SPRINGS OR DETENTS
10	4	V-47	SCREW, 1/4-20 X 1, SOCKET HEAD CAP
9	1	AY-38M-11	CLASSIC SOLENOID - 1/2" NPT CONDUIT, 120/60
8	1	SSA48	ADAPTOR, SOLENOID, 1/2", 3/4" & 1" VALVE
7	1	S4	SPOOL - STANDARD, 2 POS, CLSD CTR, 1/2" VALVE
6	1	CS4	SPRING - RETURN, 1/2" VALVES
5	1	PEC48-3	END CAP, VENTED, 380 AL, 1/2", 3/4" & 1" VALVES
4	4	V-46	SCREW, 1/4-20 X 3/4, SOCKET HEAD CAP
3	2	ECG48	GASKET - END CAP, 1/2", 3/4" & 1" VALVE
2	6	V-6	O-RING, BUNA-N, 70 DURO, AS-216, (REF 1-1/8 X 1-3/8 X 1/8), 1/2" VALVES, 1" SUBPLATE
1	1	BP4-1	BODY, 1/2" SUBPLATE, UPPER PILOTS, ANODIZED

LIMITS ON DIMENSIONS UNLESS OTHERWISE SPECIFIED
2-PL DECIMAL ± .01
3-PL DECIMAL ± .005
FRACTIONAL ± 1/64
ANGULAR ± 1/2'

AAA PRODUCTS INTERNATIONAL
7114 Harry Hines Blvd
Dallas, TX 75235

DRAWN: RMcKenna DATE: 1/11/2016
CHECKED: KWaite DATE: 1/11/2016
SCALE: 1 : 1 SHEET: 1 OF 1
RELEASED: HWomack DATE: 1/11/2016

TITLE:
1/2" SUBPLATE, SNGL SOL, 2 POS., SPRING RTRN, MOLD-OVER, 120/60, EXT PILOT

PART NO.: SO4PMZ
REV.:

THE INFORMATION CONTAINED WITHIN THIS DOCUMENT IS PROPRIETARY TO AAA PRODUCTS AND MAY NOT BE DISCLOSED WITHOUT PRIOR WRITTEN CONSENT

D:\Engineering\Product\Valve\Assembly\Classic\SO4pMz\SO4PMZ.dw