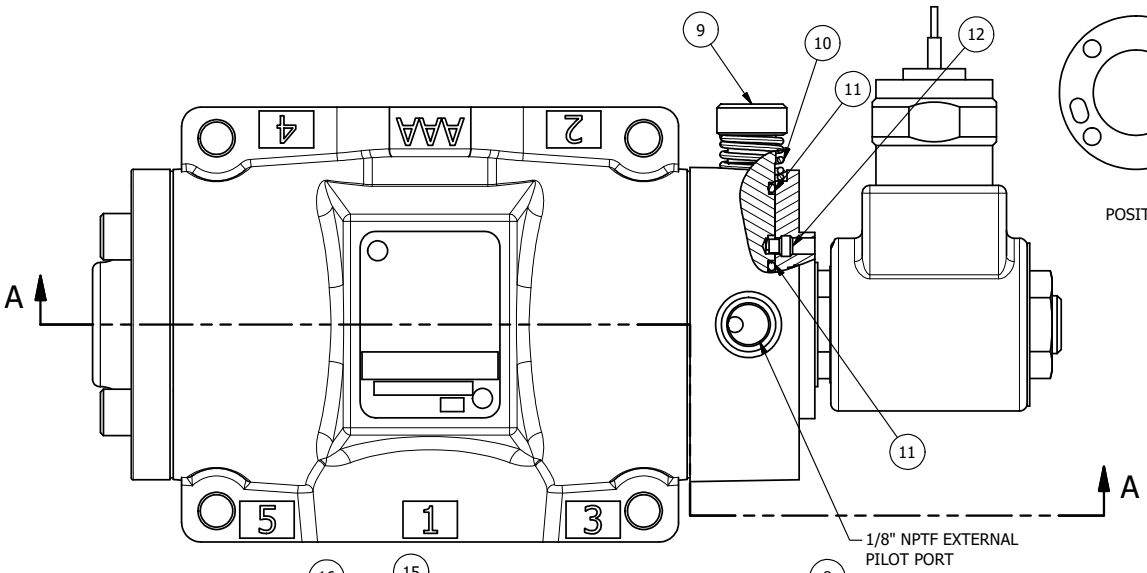

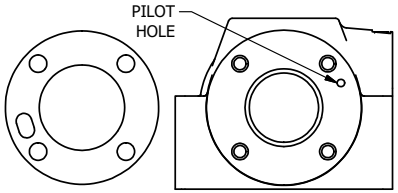

POSITION GASKET TO SEAL PILOT HOLE
SIDE 'B' ONLY.

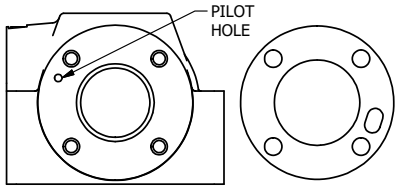

POSITION GASKET TO SEAL PILOT HOLE, BOTH SIDES.
THE ROUND ALUMINUM ADAPTOR IS ROTATED 90 DEGREES.
SUPPLY 50-160 PSI TO 1/8" NPTF PILOT PORT IN ADAPTOR.

NOTES:
1) ALWAYS GIVE VALVE MODEL AND PART NUMBER WHEN ORDERING PARTS.
2) FOR DIFFERENT VOLTAGES OTHER THAN 120/60, REPLACE SOLENOID OPERATOR WITH OPERATOR LISTED IN TABLE BELOW. REFERENCE AY-38M DRAWING FOR REPLACEMENT COILS.

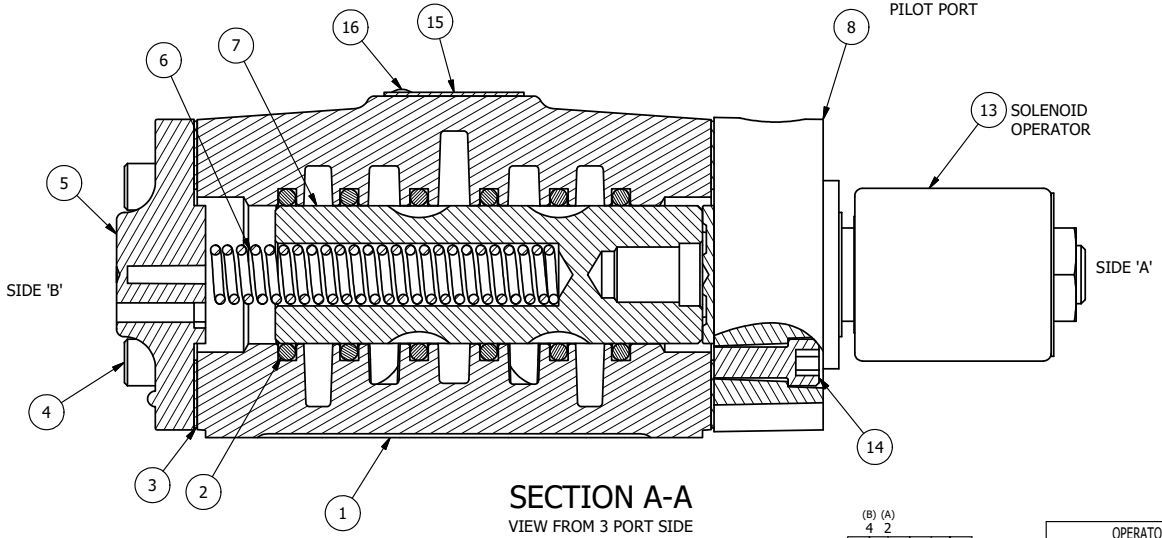

SECTION A-A
VIEW FROM 3 PORT SIDE

FLG	QTY	PART NO	DESCRIPTION
16	2	V-212	SCREW, #2 X 3/16 DRIVE, TYPE U, OVAL HEAD, STAINLESS STEEL
15	1	AN-114	NAMEPLATE, BLANK, FOR VALVES WITH SPRINGS OR DETENTS
14	4	V-47	SCREW, 1/4-20 X 1, SOCKET HEAD CAP
13	1	AY-38M-11	CLASSIC SOLENOID - 1/2" NPT CONDUIT, 120/60
12	1	V-81	SCREW, 8-32 X 5/16, SOCKET SET, FULL DOG POINT
11	2	V-85	O-RING, BUNA-N, 70 DURO, AS-010, (REF 1/4 X 3/8 X 1/16), CLASSIC OVRD
10	1	OS3W	SPRING - OVERRIDE RETURN, "CLASSIC" SOLENOID
9	1	OP4-W	OVERRIDE PIN, SPRING RETURN, 1/2", 3/4" & 1" VALVE
8	1	SSA48-OW	ADAPTOR, 'A' SIDE, CLASSIC SOL., NON-LOCKING OVERRIDE, 1/2", 3/4" & 1" VALVE
7	1	S4	SPOOL - STANDARD, 2 POS, CLSD CTR, 1/2" VALVE
6	1	CS4	SPRING - RETURN, 1/2" VALVES
5	1	PEC48-3	END CAP, VENTED, 380 AL, 1/2", 3/4" & 1" VALVES
4	4	V-46	SCREW, 1/4-20 X 3/4, SOCKET HEAD CAP
3	2	ECG48	GASKET - END CAP, 1/2", 3/4" & 1" VALVE
2	6	V-6	O-RING, BUNA-N, 70 DURO, AS-216, (REF 1-1/8 X 1-3/8 X 1/8), 1/2" VALVES, 1" SUBPLATE
1	1	B4-1	BODY, 1/2" SIDE PORT, UPPER PILOTS, ANODIZED

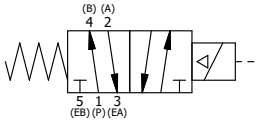

OPERATOR VOLTAGES	
PART NO	REPLACE OPERATOR
SO4MONZ 12VDC	AY-38M-5
SO4MONZ 24VDC	AY-38M-8
SO4MONZ 240/60	AY-38M-17

LIMITS ON DIMENSIONS UNLESS OTHERWISE SPECIFIED
2-PL DECIMAL ± .01
3-PL DECIMAL ± .005
FRACTIONAL ± 1/64
ANGULAR ± 1/2'

AAA PRODUCTS INTERNATIONAL
7114 Harry Hines Blvd
Dallas, TX 75235

DRAWN: RMcKenna DATE: 1/18/2020
CHECKED: KWaite DATE: 1/18/2020
SCALE: 1 : 1 SHEET: 1 OF 1
RELEASED: HWomack DATE: 1/18/2020

TITLE:
1/2" SIDE PORT, SNGL SOL, 2 POS., SPRING RTRN, MOLD-OVER, 120/60, NON-LCKNG OVRD, EXT PILOT

PART NO.: SO4MONZ
REV.:

THE INFORMATION CONTAINED WITHIN THIS DOCUMENT IS PROPRIETARY TO AAA PRODUCTS AND MAY NOT BE DISCLOSED WITHOUT PRIOR WRITTEN CONSENT

D:\Engineering\Product\Valve\Assembly\Classic\SO4\SO4MONZ.dw