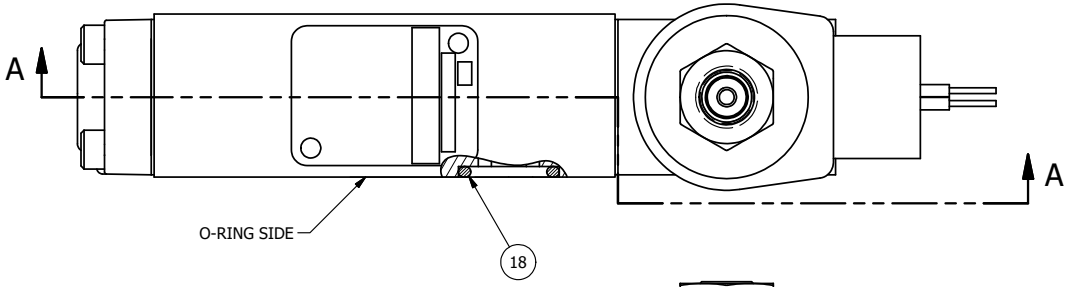

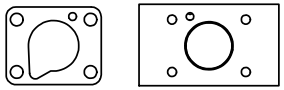

POSITION GASKET ON END OF VALVE TO SEAL PILOT HOLE IF PRESENT, SIDE 'B' ONLY

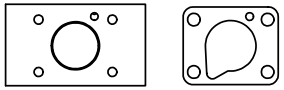

POSITION GASKET ON END OF VALVE TO ALIGN PILOT HOLES, SIDE 'A' ONLY

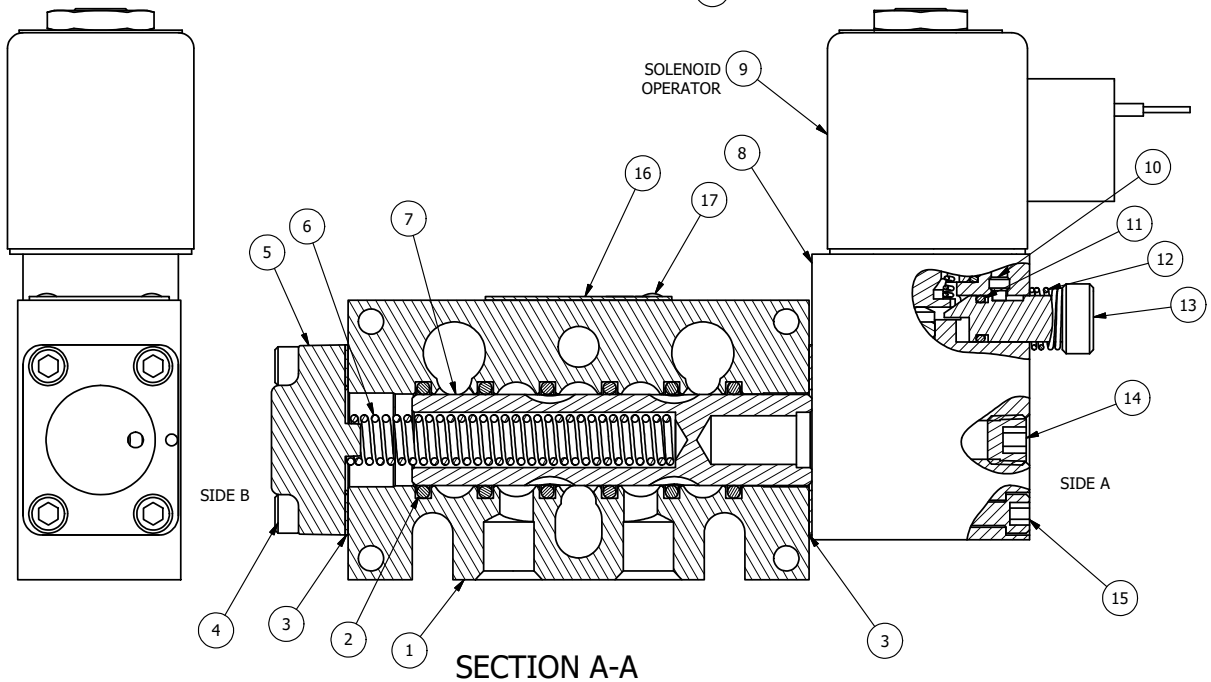

SECTION A-A
VIEW FROM O-RING SIDE

NOTES:
1) ALWAYS GIVE VALVE MODEL AND PART NUMBER WHEN ORDERING PARTS.
2) FOR DIFFERENT VOLTAGES OTHER THAN 120/60, REPLACE SOLENOID OPERATOR WITH OPERATOR LISTED IN TABLE BELOW. REFERENCE AY-38T DRAWING FOR REPLACEMENT COILS.

FLG	QTY	PART NO	DESCRIPTION
18	3	V-110	O-RING, BUNA-N, 70 DURO, AS-114, (REF 5/8 X 13/16 X 3/32), 1/4" SLEEVE, 1/2" SUB, STACK
17	2	V-212	SCREW, #2 X 3/16 DRIVE, TYPE U, OVAL HEAD, STAINLESS STEEL
16	1	AN-114	NAMEPLATE, BLANK, FOR VALVES WITH SPRINGS OR DETENTS
15	4	V-1	SCREW, 10-24 X 2, SOCKET HEAD CAP
14	1	V-19	PLUG, SOCKET PIPE 1/8" NPT (#601-3 PITTSBURG PLUG PART #.)
13	1	POP-3	OVERRIDE, PUSH PIN, 303 STAINLESS, 1/4" & 3/8" VALVE
12	1	OS3	SPRING - MANUAL OVERRIDE, "CLASSIC" SOLENOID
11	1	V-85	O-RING, BUNA-N, 70 DURO, AS-010, (REF 1/4 X 3/8 X 1/16), CLASSIC OVRD
10	1	V-81	SCREW, 8-32 X 5/16, SOCKET SET, FULL DOG POINT
9	1	AY-38T-11	CLASSIC SOLENOID - STANDARD, COMPLETE OPER, TAPPED EXH., 120/60
8	1	PB3-6E	ADAPTOR - SOLENOID, WITH O'RIDE, SINGLE PILOT, 1/4" & 3/8" STACKING VALVE
7	1	S3	SPOOL - STANDARD, 2 POS, CLSD CTR, 1/4" & 3/8" VALVE
6	1	CS3	SPRING - RETURN, (EXCEPT HO, KO & PO) 1/4" & 3/8" VALVES
5	1	SEC3-A	END CAP, VENTED, SPRING BOSS, 380 AL, 1/4" & 3/8" VALVE
4	4	V-38	SCREW, 10-24 X 3/4, SOCKET HEAD CAP
3	2	ECG3	GASKET - END CAP, 1/4" & 3/8" VALVE
2	6	V-39	O-RING, VITON, STD BODY, 1/4" & 3/8" VALVES
1	1	B2-10E	FINISHED - SOLID BODY, UPPER PILOTS, 1/4" STACKING VALVE

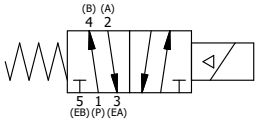

OPERATOR VOLTAGES	
PART NO	REPLACE OPERATOR
BSO2OPT 12VDC	AY-38T-5
BSO2OPT 24VDC	AY-38T-8
BSO2OPT 240/60	AY-38T-17

LIMITS ON DIMENSIONS UNLESS OTHERWISE SPECIFIED
2-PL DECIMAL ± .01
3-PL DECIMAL ± .005
FRACTIONAL ± 1/64
ANGULAR ± 1/2'

AAA PRODUCTS INTERNATIONAL
7114 Harry Hines Blvd
Dallas, TX 75235

DRAWN: RMcKenna	DATE: 1/2/2020	CHECKED: KWaite	DATE: 1/2/2020
SCALE: None	SHEET: 1 OF 1	RELEASED: HWomack	DATE: 1/2/2020

TITLE: 1/4" STACK, SNGL SOL, 2 POS, SPRING RTRN, CLASSIC SOL, 120/60, PUSH OVRD, TAPPED VENT

PART NO.: BSO2OPT

REV.:

THE INFORMATION CONTAINED WITHIN THIS DOCUMENT IS PROPRIETARY TO AAA PRODUCTS AND MAY NOT BE DISCLOSED WITHOUT PRIOR WRITTEN CONSENT

D:\Engineering\Product\Valve\Assembly\Classic\SOLVG\BSO2OPT.dw