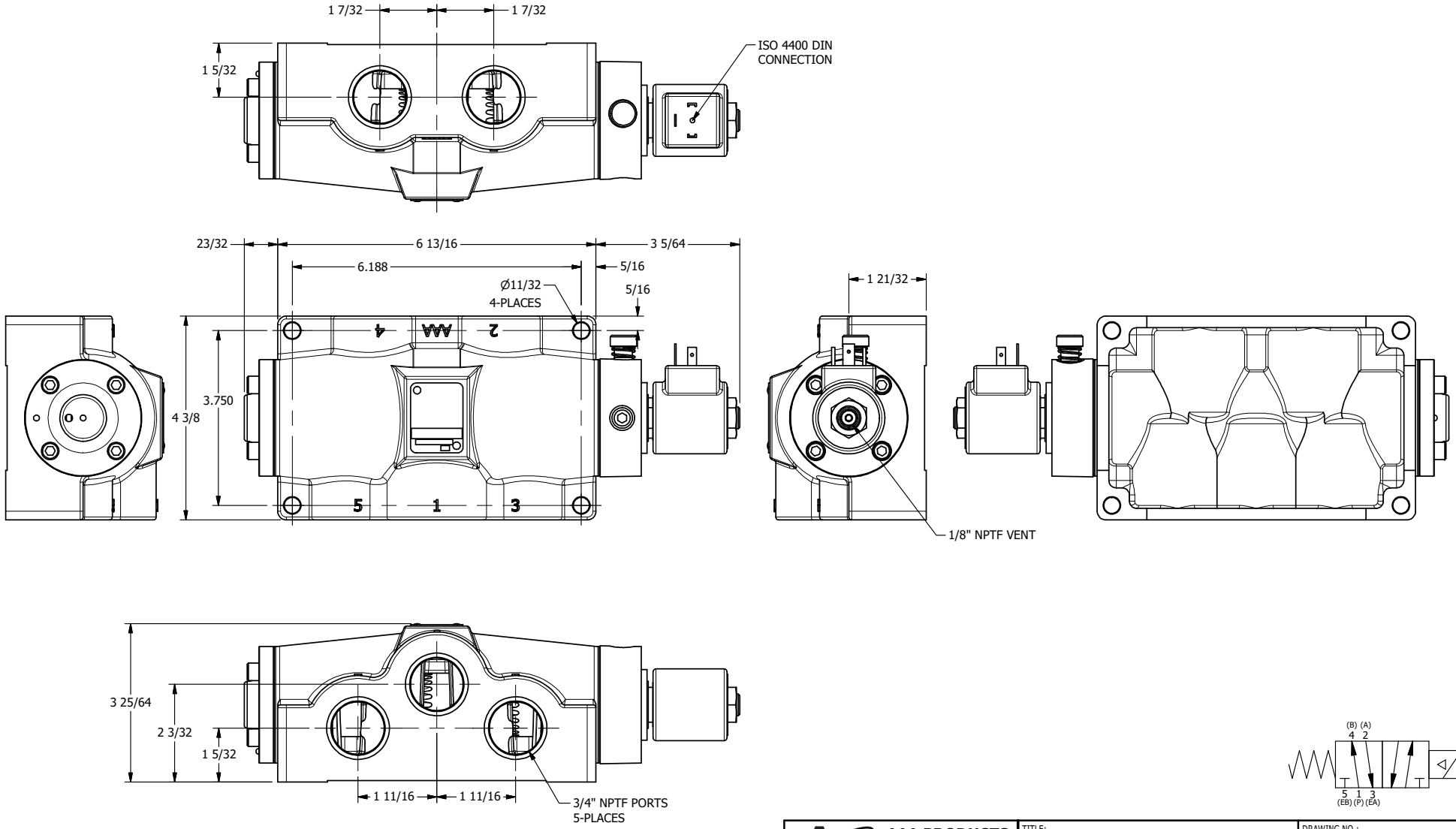

AAA PRODUCTS INTERNATIONAL
7114 Harry Hines Blvd
Dallas, TX 75235

TITLE: 1" SIDE PORT, SNGL SOL, 2 POS, SPRING RTRN, ISO 4400 DIN, LCKNG OVRD, TAPPED VENT

DRAWING NO.: DIM_SO8EDOT

THE INFORMATION CONTAINED WITHIN THIS DOCUMENT IS PROPRIETARY TO AAA PRODUCTS AND MAY NOT BE DISCLOSED WITHOUT PRIOR WRITTEN CONSENT