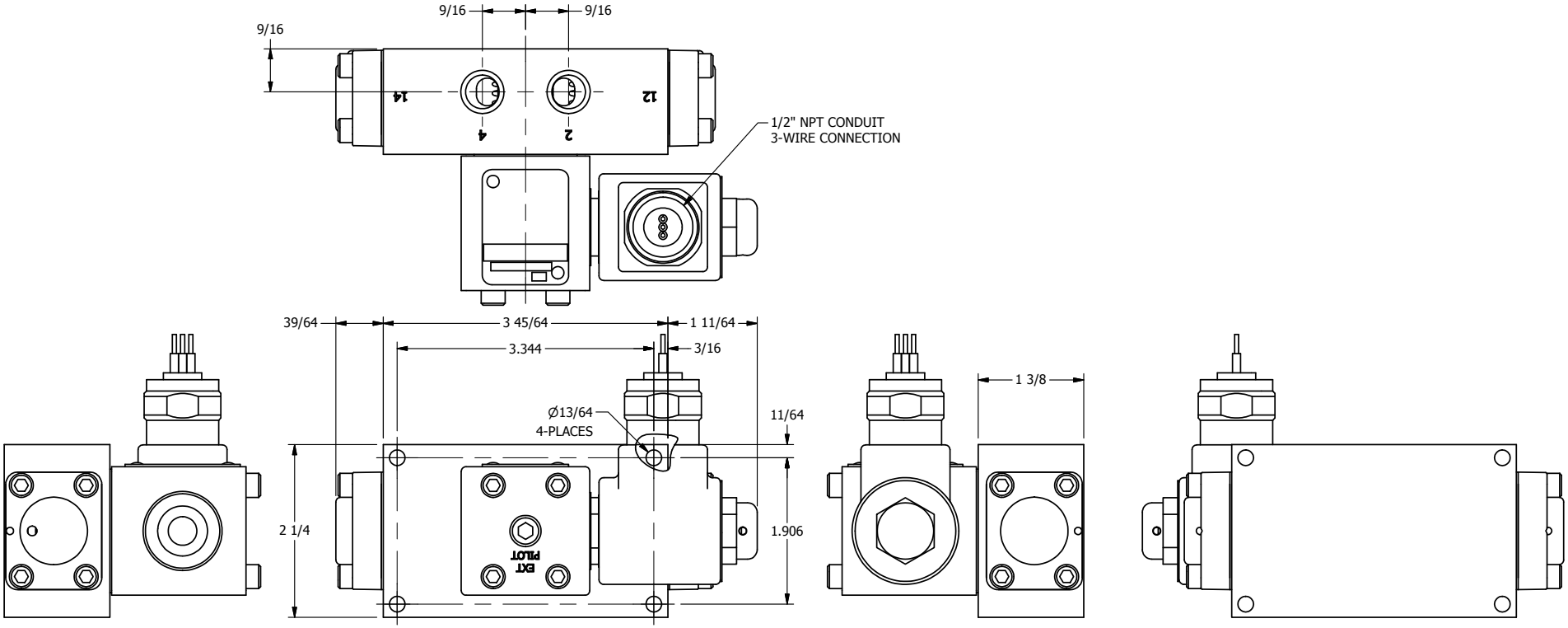

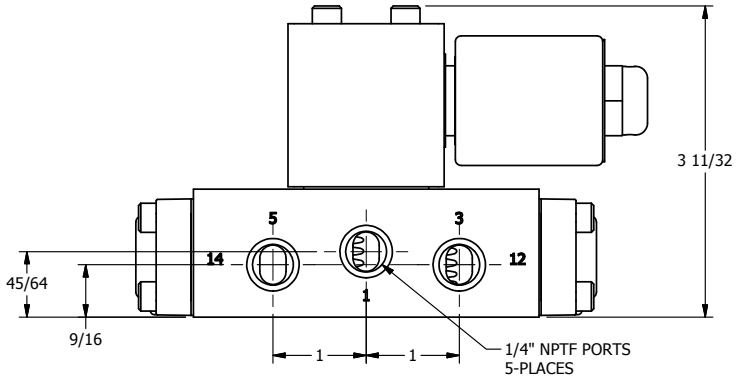

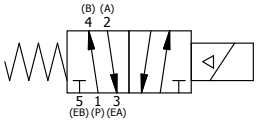

AAA PRODUCTS INTERNATIONAL
7114 Harry Hines Blvd
Dallas, TX 75235

TITLE: 1/4" SIDE PORT, SNGL SOL, 2 POS, SPRING RTRN, MOLD-OVER, DUST EXCLDR

DRAWING NO.: DIM_SO2ML

THE INFORMATION CONTAINED WITHIN THIS DOCUMENT IS PROPRIETARY TO AAA PRODUCTS AND MAY NOT BE DISCLOSED WITHOUT PRIOR WRITTEN CONSENT