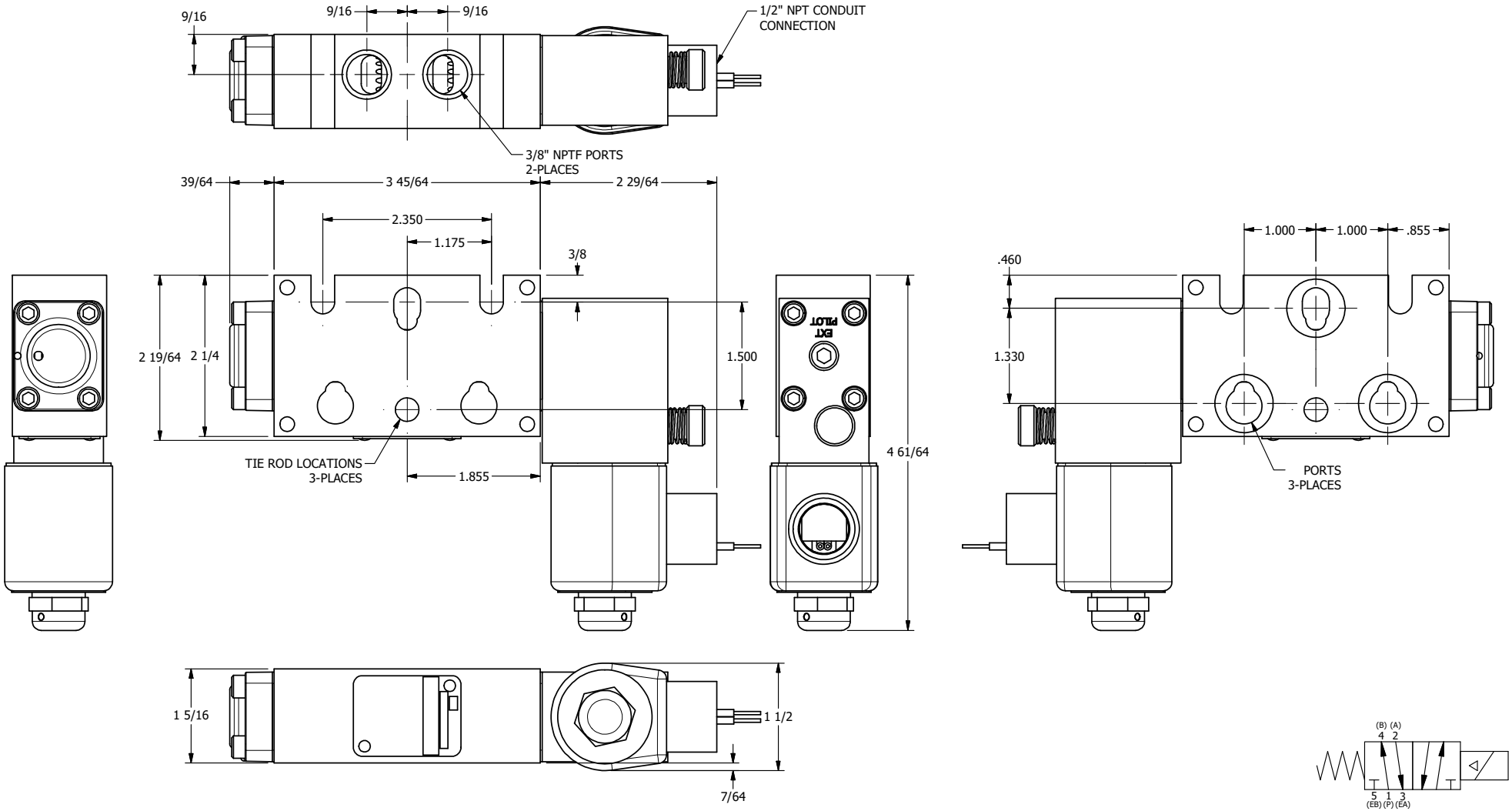

AAA PRODUCTS INTERNATIONAL
7114 Harry Hines Blvd
Dallas, TX 75235

TITLE: 3/8" STACK, SNGL SOL, 2 POS, SPRING RTRN, CLASSIC SOL, PUSH OVRD, DUST EXCLDR

DRAWING NO.: DIM_BSO3OPL

THE INFORMATION CONTAINED WITHIN THIS DOCUMENT IS PROPRIETARY TO AAA PRODUCTS AND MAY NOT BE DISCLOSED WITHOUT PRIOR WRITTEN CONSENT