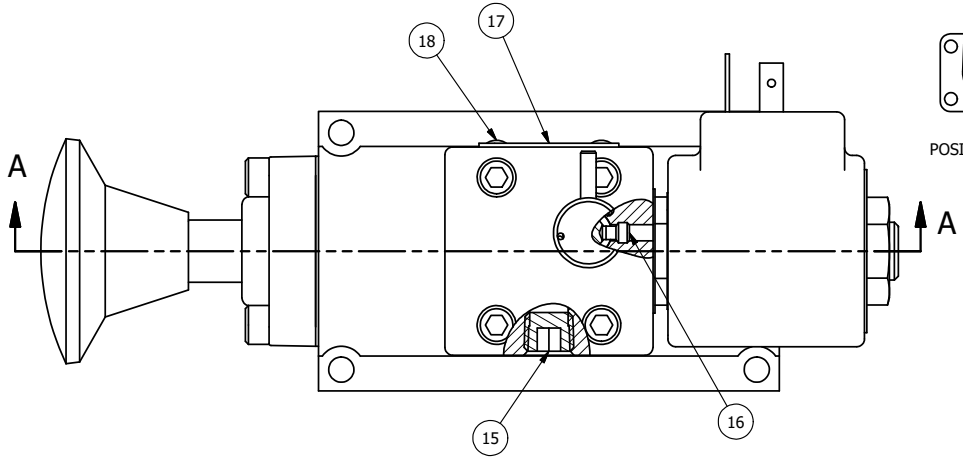

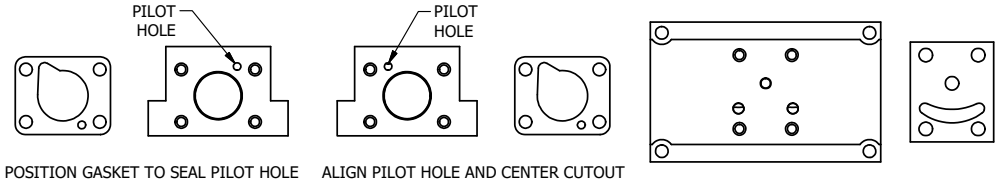

POSITION GASKET TO SEAL PILOT HOLE ON SIDE 'B' AS SHOWN.

ALIGN PILOT HOLE AND CENTER CUTOUT ON SIDE 'A' AS SHOWN.

ALIGN HOLES IN GASKET AS SHOWN.
(FOR EXTERNAL PILOT, TOP PILOT MUST BE PLUGGED SEE BP3-6EZ BODY PRINT)

NOTES:
1) ALWAYS GIVE VALVE MODEL AND PART NUMBER WHEN ORDERING PARTS.
2) FOR DIFFERENT VOLTAGES OTHER THAN 120/60, REPLACE SOLENOID OPERATOR WITH OPERATOR LISTED IN TABLE BELOW. REFERENCE AY-38EDT DRAWING FOR REPLACEMENT COILS.

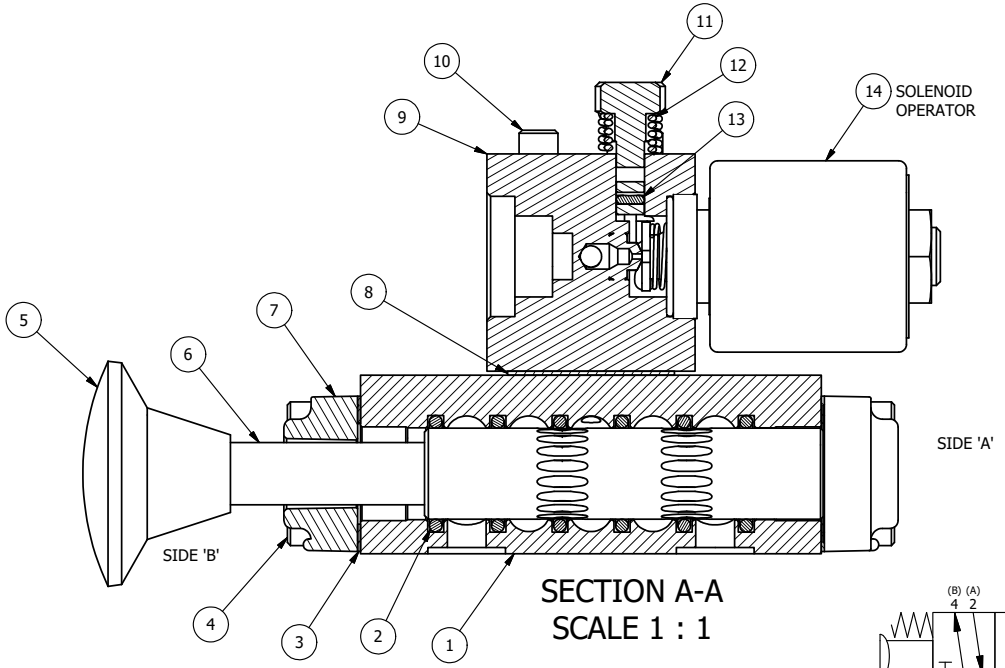

SECTION A-A
SCALE 1 : 1

FLG	QTY	PART NO	DESCRIPTION
19	1	SPK-3	KIT - SUBPLATE MOUNTING, 3/8" SUBPLATE VALVES
18	2	V-212	SCREW, #2 X 3/16 DRIVE, TYPE U, OVAL HEAD, STAINLESS STEEL
17	1	AN-114	NAMEPLATE, BLANK, FOR VALVES WITH SPRINGS OR DETENTS
16	1	V-81	SCREW, 8-32 X 5/16, SOCKET SET, FULL DOG POINT
15	1	V-19	PLUG, SOCKET PIPE 1/8" NPT, 7/8 TAPER, FLUSH SEAL
14	1	AY-38EDT-11	CLASSIC SOLENOID - ISO 4400 DIN, 1/8" NPTF SOL EXHST, 120/60
13	1	V-85	O-RING, BUNA-N, 70 DURO, AS-010, (REF 1/4 X 3/8 X 1/16), CLASSIC OVRD
12	1	OS3W	SPRING - OVERRIDE RETURN, "CLASSIC" SOLENOID
11	1	OP3-W	OVERRIDE PIN - SPRING RETURN, 1/4" & 3/8" VALVE
10	4	V-1	SCREW, 10-24 X 2, SOCKET HEAD CAP
9	1	PB3-3EW	ADAPTOR - SNGL SOL., NON-LOCKING OVERRIDE, 1/4" & 3/8" VALVE
8	1	PBG3-1	GASKET - PIGGY BACK, SINGLE SOLENOID, 1/4" & 3/8" VALVE
7	1	PEC3-2	END CAP, PALM, 380 AL, 1/4" & 3/8" VALVE
6	1	AY-SAK3	ASSY - NO DETENT, RTRN TO POS A, CLASSIC SOL W/PALM OVRD, 1/4" & 3/8" VALVES
5	1	V-71	KNOB, BLACK, PALM, (BRASS 5/16-18 INSERT), 1-13/16 DIA X 1-3/8 HEIGHT
4	8	V-38	SCREW, 10-24 X 3/4, SOCKET HEAD CAP
3	2	ECG3	GASKET - END CAP, 1/4" & 3/8" VALVE
2	6	V-39	O-RING, VITON, STD BODY, 1/4" & 3/8" VALVES
1	1	BP3-6E	BODY - SOLID, PIGGY BACK, ANODIZED, 3/8" SUBPLATE VALVE

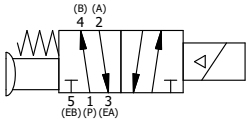

OPERATOR VOLTAGES	
PART NO	REPLACE OPERATOR
SAK3PEDONT 12VDC	AY-38EDT-5
SAK3PEDONT 24VDC	AY-38EDT-8
SAK3PEDONT 240/60	AY-38EDT-17

LIMITS ON DIMENSIONS UNLESS OTHERWISE SPECIFIED
2-PL DECIMAL ± .01
3-PL DECIMAL ± .005
FRACTIONAL ± 1/64
ANGULAR ± 1/2'

AAA PRODUCTS INTERNATIONAL
7114 Harry Hines Blvd
Dallas, TX 75235

DRAWN: RMcKenna DATE: 4/4/2021
CHECKED: KWaite DATE: 4/4/2021
SCALE: None SHEET: 1 OF 1
RELEASED: HWomack DATE: 4/4/2021

TITLE: 3/8" SUBPLATE, SNGL SOL, 2 POS, SPR RTRN, ISO4400 DIN, 120/60, NON-LCK OVRD, TPD VENT, PALM AST

PART NO.: SAK3PEDONT

REV.:

THE INFORMATION CONTAINED WITHIN THIS DOCUMENT IS PROPRIETARY TO AAA PRODUCTS AND MAY NOT BE DISCLOSED WITHOUT PRIOR WRITTEN CONSENT

D:\Engineering\Product\Valves\Assembly\Classic\SAK\DWG\SAK3PEDONT.fdw