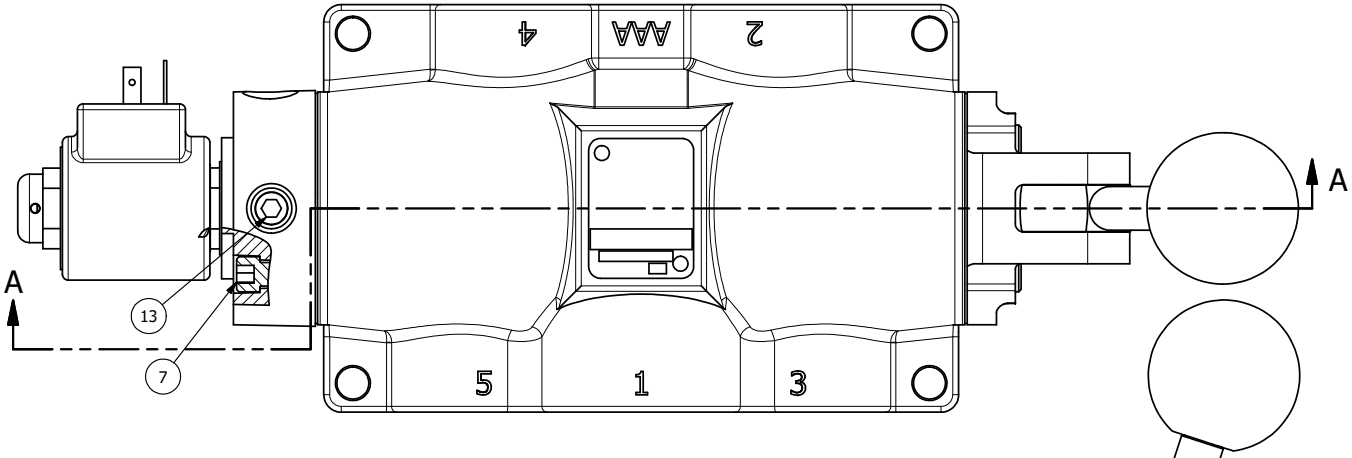

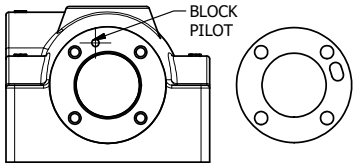

POSITON GASKET ON END OF VALVE SO
GASKET COVERES PILOT HOLE SIDE 'A' ONLY

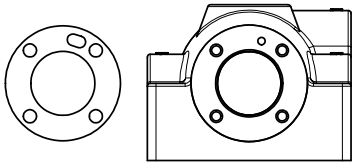

ALIGN PILOT AND HOLE IN GASKET, SIDE 'B' ONLY
FOR EXTERNAL PILOT OPERATION - ROTATE THE
ROUND ALUMINUM ADAPTOR 90 OR 180 DEGREES.
REMOVE 1/8" NPTF PLUG AND SUPPLY 50-160 PSI TO
1/8" NPTF PILOT PORT IN ADAPTOR.

NOTES:
1) ALWAYS GIVE VALVE MODEL AND PART NUMBER WHEN ORDERING PARTS.
2) FOR DIFFERENT VOLTAGES OTHER THAN 120/60, REPLACE SOLENOID OPERATOR WITH OPERATOR LISTED IN TABLE BELOW. REFERENCE AY-38EDL DRAWING FOR REPLACEMENT COILS.

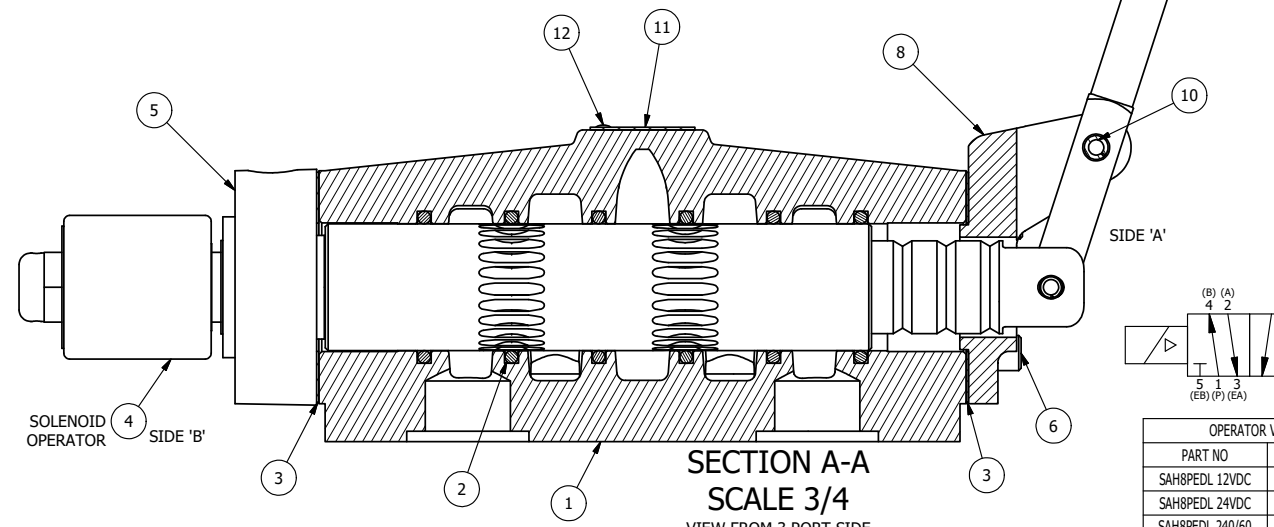

SECTION A-A
SCALE 3/4
VIEW FROM 3 PORT SIDE

FLG	QTY	PART NO	DESCRIPTION
14	1	SPK-8	KIT - SUBPLATE MOUNT, 1" SUBPLATE VALVES
13	1	V-19	PLUG, SOCKET PIPE 1/8" NPT (#601-3 PITTSBURG PLUG PART #.)
12	2	V-212	SCREW, #2 X 3/16 DRIVE, TYPE U, OVAL HEAD, STAINLESS STEEL
11	1	AN-114	NAMEPLATE, BLANK, FOR VALVES WITH SPRINGS OR DETENTS
10	1	V-70	PIN, ROLL 1/4 X 1 1/8 FOR 3/4 & 1" HAND AND FOOT VALVES
9	1	HL8-9	HAND LEVER ASSEMBLY, 3/4" & 1" VALVE
8	1	FE8	END CAP, HAND & FOOT, STEEL, NICKEL PLATE, 3/4" & 1" VALVES
7	4	V-47	SCREW, 1/4-20 X 1, SOCKET HEAD CAP
6	4	V-46	SCREW, 1/4-20 X 3/4, SOCKET HEAD CAP
5	1	AY-SAH8	ASSY - RTRN TO POS A, CLASSIC SOL, 3/4" & 1" VALVE
4	1	AY-38EDL-11	CLASSIC SOLENOID - ISO 4400 DIN, DUST EXCLUDER NUT, 120/60
3	2	ECG48	GASKET - END CAP, 1/2", 3/4" & 1" VALVE
2	6	V-30	O-RING, BUNA-N, 70 DURO, AS-220, (REF 1-3/8 X 1-5/8 X 1/8), 3/4" & 1" VALVES
1	1	BP8-1	BODY, 1" SUBPLATE, UPPER PILOTS, ANODIZED

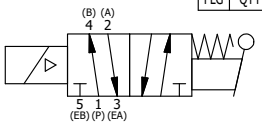

OPERATOR VOLTAGES	
PART NO	REPLACE OPERATOR
SAH8PEDL 12VDC	AY-38EDL-5
SAH8PEDL 24VDC	AY-38EDL-8
SAH8PEDL 240/60	AY-38EDL-17

LIMITS ON DIMENSIONS UNLESS OTHERWISE SPECIFIED
2-PL DECIMAL ± .01
3-PL DECIMAL ± .005
FRACTIONAL ± 1/64
ANGULAR ± 1/2'

AAA PRODUCTS INTERNATIONAL
7114 Harry Hines Blvd
Dallas, TX 75235

DRAWN: RMcKenna DATE: 11/18/2017
CHECKED: KWaite DATE: 11/18/2017
SCALE: 3/4 SHEET: 1 OF 1
RELEASED: HWomack DATE: 11/18/2017

TITLE: 1" SUBPLATE, SNGL SOL, 2 POS, SPR RTRN, SOL SHFT, LEVER ASSIST, ISO 4400 DIN, 120/60, DUST EXCLDR

PART NO.: SAH8PEDL

REV.:

THE INFORMATION CONTAINED WITHIN THIS DOCUMENT IS PROPRIETARY TO AAA PRODUCTS AND MAY NOT BE DISCLOSED WITHOUT PRIOR WRITTEN CONSENT

D:\Engineering\Product\Valve\Assembly\Classic\SAH8\SAH8PEDL.dw