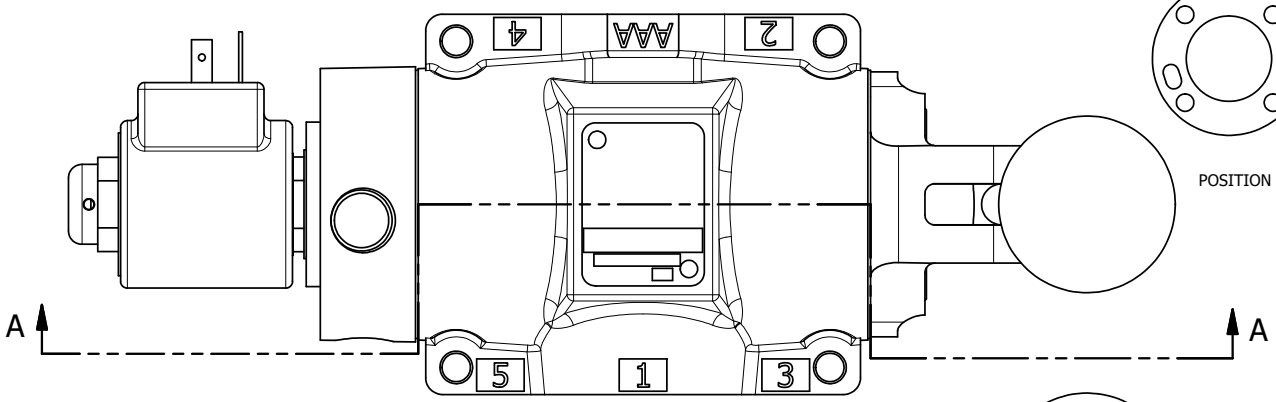

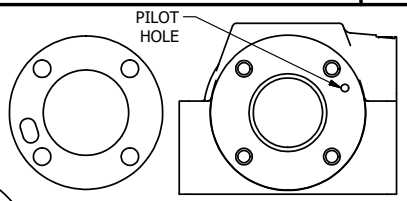

POSITION GASKET TO SEAL PILOT HOLE
SIDE 'B' ONLY.

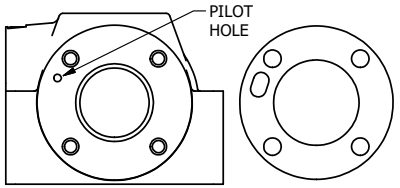

ALIGN PILOT AND HOLE IN GASKET, SIDE 'A' ONLY FOR EXTERNAL PILOT OPERATION - ROTATE THE ROUND ALUMINUM ADAPTOR 90 OR 180 DEGREES. REMOVE 1/8" NPTF PLUG AND SUPPLY 50-160 PSI TO 1/8" NPTF PILOT PORT IN ADAPTOR.

NOTES:
1) ALWAYS GIVE VALVE MODEL AND PART NUMBER WHEN ORDERING PARTS.
2) FOR DIFFERENT VOLTAGES OTHER THAN 120/60, REPLACE SOLENOID OPERATOR WITH OPERATOR LISTED IN TABLE BELOW. REFERENCE AY-38EDL DRAWING FOR REPLACEMENT COILS.

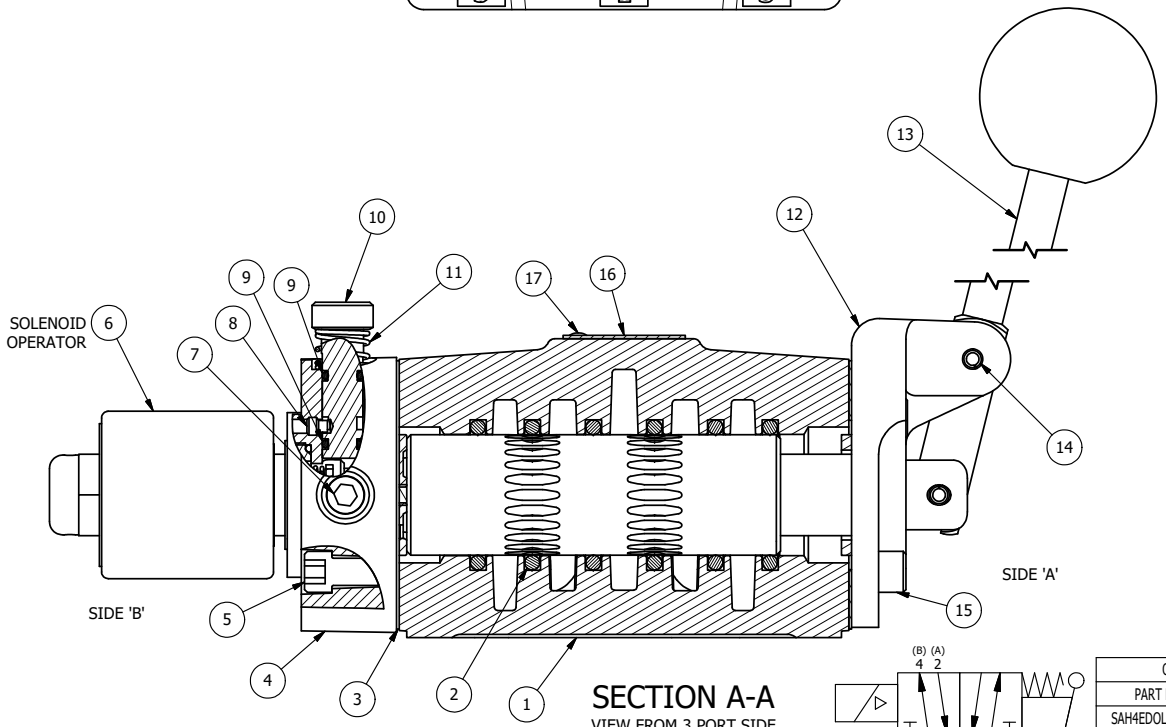

SECTION A-A
VIEW FROM 3 PORT SIDE

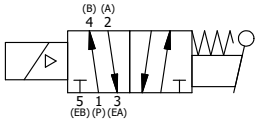

OPERATOR VOLTAGES	
PART NO	REPLACE OPERATOR
SAH4EDOL 12VDC	AY-38EDL-5
SAH4EDOL 24VDC	AY-38EDL-8
SAH4EDOL 240/60	AY-38EDL-17

FLG	QTY	PART NO	DESCRIPTION
17	2	V-212	SCREW, #2 X 3/16 DRIVE, TYPE U, OVAL HEAD, STAINLESS STEEL
16	1	AN-114	NAMEPLATE, BLANK, FOR VALVES WITH SPRINGS OR DETENTS
15	4	V-46	SCREW, 1/4-20 X 3/4, SOCKET HEAD CAP
14	1	V-10	PIN, ROLL 3/16 X 7/8, STEEL
13	1	HL4-9	HAND LEVER ASSEMBLY, 1/2" VALVE
12	1	FE4-1	END CAP - HAND & FOOT, 380 AL, 1/2" VALVE
11	1	OS3	SPRING - MANUAL OVERRIDE, "CLASSIC" SOLENOID
10	1	OP4	PIN , MANUAL OVERRIDE, 1/2", 3/4" & 1" VALVES
9	2	V-85	O-RING, BUNA-N, 70 DURO, AS-010, (REF 1/4 X 3/8 X 1/16), CLASSIC OVRD
8	1	V-81	SCREW, 8-32 X 5/16, SOCKET SET, FULL DOG POINT
7	1	V-19	PLUG, SOCKET PIPE 1/8" NPT (#601-3 PITTSBURG PLUG PART #.)
6	1	AY-38EDL-11	CLASSIC SOLENOID - ISO 4400 DIN, DUST EXCLUDER NUT, 120/60
5	4	V-47	SCREW, 1/4-20 X 1, SOCKET HEAD CAP
4	1	AY-SAH4O	ASSY - NO DETENT, RTRN TO POS A, CLASSIC SOL, W/LEVER OVRD, LCKNG OVRD, 1/2" VALVES
3	2	ECG48	GASKET - END CAP, 1/2", 3/4" & 1" VALVE
2	6	V-6	O-RING, BUNA-N, 70 DURO, AS-216, (REF 1-1/8 X 1-3/8 X 1/8), 1/2" VALVES, 1" SUBPLATE
1	1	B4-1	BODY, 1/2" SIDE PORT, UPPER PILOTS, ANODIZED

LIMITS ON DIMENSIONS UNLESS OTHERWISE SPECIFIED
2-PL DECIMAL ± .01
3-PL DECIMAL ± .005
FRACTIONAL ± 1/64
ANGULAR ± 1/2'

AAA PRODUCTS INTERNATIONAL
7114 Harry Hines Blvd
Dallas, TX 75235

DRAWN: RMcKenna	DATE: 4/4/2020	CHECKED: KWaite	DATE: 4/4/2020
SCALE: 1 : 1	SHEET: 1 OF 1	RELEASED: HWomack	DATE: 4/4/2020

TITLE:
1/2" SIDE PORT, SNGL SOL, 2 POS., SPR RTN, LVR AST, ISO 4400, 120/60, LCKNG OVRD, DUST EXCLDR

PART NO.: SAH4EDOL

REV.:

D:\Engineering\Product\Valve\Assembly\Classic\SAH\SAH4EDOL.dw

THE INFORMATION CONTAINED WITHIN THIS DOCUMENT IS PROPRIETARY TO AAA PRODUCTS AND MAY NOT BE DISCLOSED WITHOUT PRIOR WRITTEN CONSENT