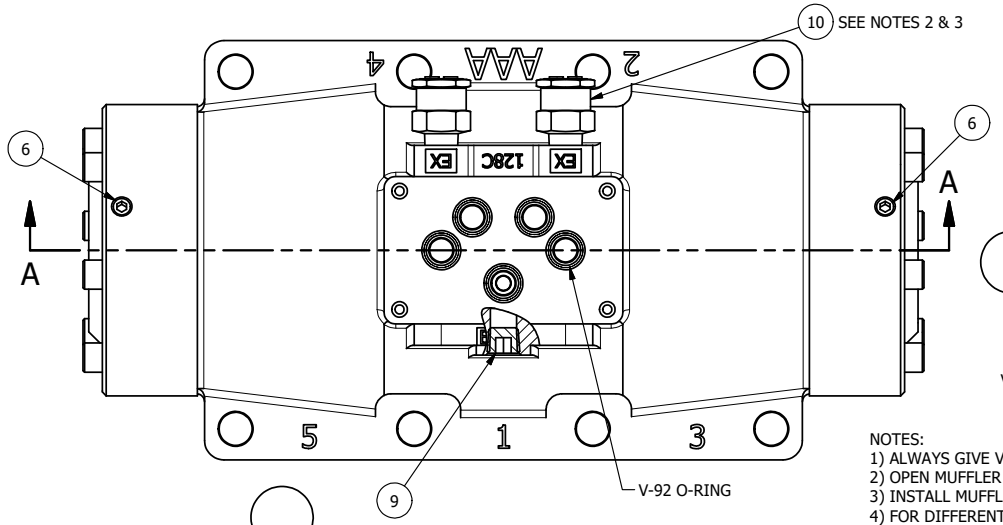


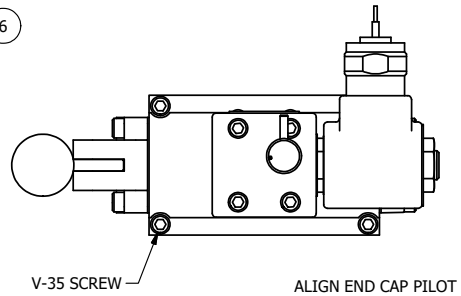


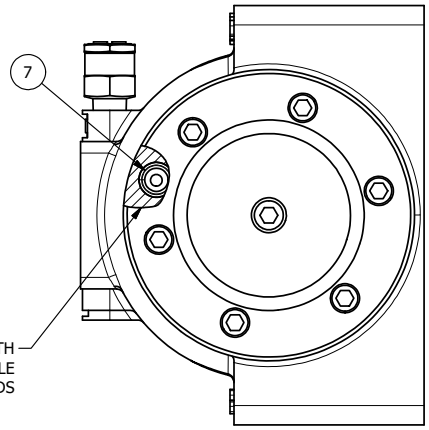


NOTES:
1) ALWAYS GIVE VALVE MODEL AND PART NUMBER WHEN ORDERING.
2) OPEN MUFFLER 2 TURNS FROM CLOSED POSITION. TIGHTEN LOCK NUT ON MUFFLER.
3) INSTALL MUFFLER WITH MAGNALUBE-G GREASE 1 TO 1-1/2 TURNS FROM HAND TIGHT INTO BODY.
4) FOR DIFFERENT VOLTAGES OTHER THAN 120/60, REPLACE TOP CONTROL VALVE WITH VALVE LISTED IN TABLE BELOW.

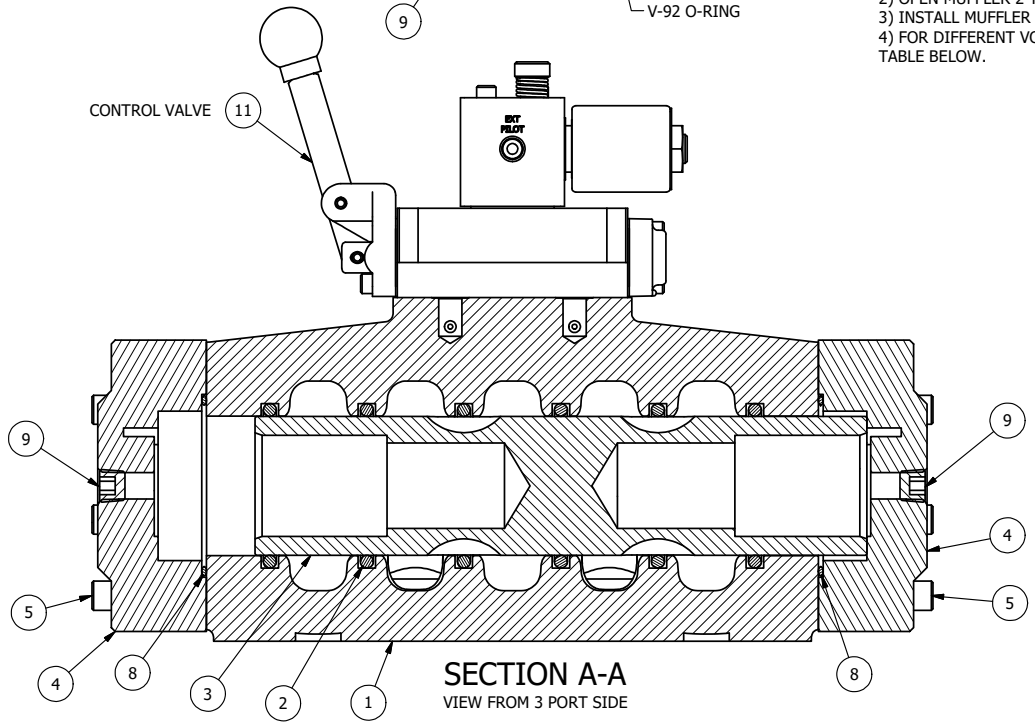


SECTION A-A
VIEW FROM 3 PORT SIDE

| THE FOLLOWING PARTS ARE INCLUDED WITH THE SUBPLATE VALVE AND ARE USED TO ASSEMBLE. | | |
|---|---|---|
| QTY | PART NO | DESCRIPTION |
| 5 | V-92 | O-RING, BUNA-N, 70 DURO, AS-014, (REF 1/2 X 5/8 X 1/16), 3/8" SUBPLATE |
| 4 | V-35 | SCREW, 10-24 X 7/8, SOCKET HEAD CAP |

| | | | |
|---|---|---|---|
| 12 | 1 | SPK-16 | KIT - SUBPLATE MOUNT, 2" SUBPLATE VALVES |
| 11 | 1 | SAH3PMONT | 3/8" SUBPLATE, SNGL SOL, 2 POS, SPR RTRN, MLD-OVR, 120/60, N-LCK OVRD, TPD VENT, LVR AST |
| 10 | 2 | MFC2 | ASSEMBLY - MUFFLER FLOW CONTROL, 1/4" NPT |
| 9 | 3 | V-337 | PLUG, SOCKET 1/4-18 FLUSH SEAL PLUG |
| 8 | 2 | V-124 | O-RING, BUNA-N, 70 DURO, AS-231, (REF 2-5/8 X 2-7/8 X 1/8), 2 POS, 1-1/2" & 2" VALVES |
| 7 | 2 | V-89 | O-RING, BUNA-N, 70 DURO, AS-110, (REF 3/8 X 9/16 X 3/32), 1" & 2" SUBPLATE PILOT |
| 6 | 2 | V-231 | PLUG, SOCKET PRESSURE 1/16-27X 7/8 TAPER FOR 122V,192V,FOR EC |
| 5 | 12 | V-143 | SCREW, 5/16-18 X 2, SOCKET HEAD CAP |
| 4 | 2 | PEC12E | ENDCAP - PILOT, SOLID, 6061-T6 AL, 1-1/2" & 2" VALVES |
| 3 | 1 | S12 | SPOOL - STANDARD, 2 POS - 3 POS CLOSED CTR, 1 1/2" & 2" VALVE |
| 2 | 6 | V-123 | O-RING, BUNA-N, 70 DURO, AS-331, (REF 2-1/4 X 2-5/8 X 3/16), 1-1/2" & 2" VALVES |
| 1 | 1 | BP16-6 | BODY, 2" SUBPLATE, PIGGY BACK |
| FLG | QTY | PART NO | DESCRIPTION |

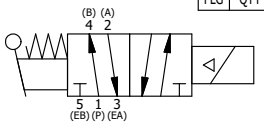


| OPERATOR VOLTAGES | |
|---|---|
| PART NO | REPLACE WITH |
| SAH16PMONT 12VDC | SAH3PMONT 12VDC |
| SAH16PMONT 24VDC | SAH3PMONT 24VDC |
| SAH16PMONT 240/60 | SAH3PMONT 240/60 |

LIMITS ON DIMENSIONS UNLESS OTHERWISE SPECIFIED
2-PL DECIMAL ± .01
3-PL DECIMAL ± .005
FRACTIONAL ± 1/64
ANGULAR ± 1/2'

**AAA PRODUCTS INTERNATIONAL**
7114 Harry Hines Blvd
Dallas, TX 75235

| | | | |
|---|---|---|---|
| DRAWN: RMcKenna | DATE: 5/13/2021 | CHECKED: KWaite | DATE: 5/13/2021 |
| SCALE: 1/2 | SHEET: 1 OF 1 | RELEASED: HWomack | DATE: 5/13/2021 |

TITLE:
2" SUBPLATE, SNGL SOL, 2 POS, SPR RTRN, MOLD-OVER, 120/60, NON-LCK OVRD, TPD VENT, LVR AST

PART NO.: SAH16PMONT

REV.:

THE INFORMATION CONTAINED WITHIN THIS DOCUMENT IS PROPRIETARY TO AAA PRODUCTS AND MAY NOT BE DISCLOSED WITHOUT PRIOR WRITTEN CONSENT

D:\Engineering\Product\Valves\Assembly\Classic\SAH\DWG\SAH16PMONT.dw