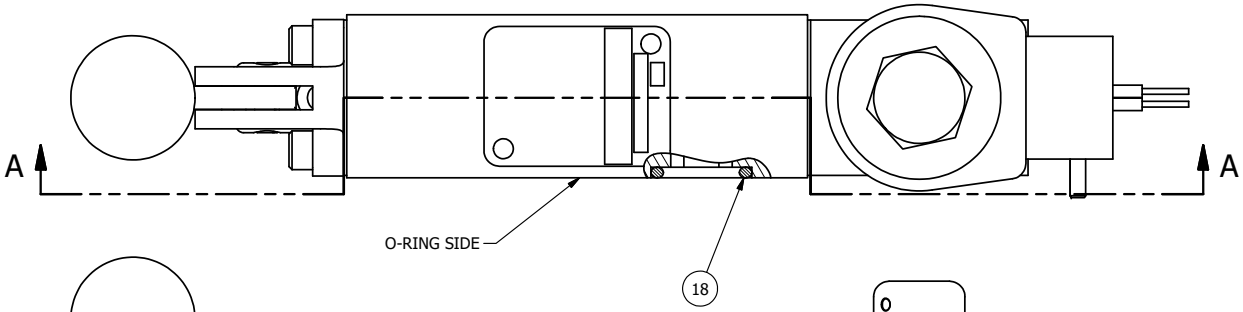


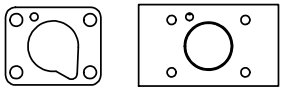

POSITION GASKET ON END OF VALVE TO ALIGN PILOT HOLES, SIDE 'B' ONLY

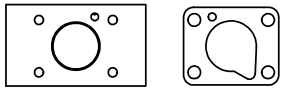

POSITION GASKET ON END OF VALVE TO SEAL PILOT HOLE IF PRESENT, SIDE 'A' ONLY

NOTES:
1) ALWAYS GIVE VALVE MODEL AND PART NUMBER WHEN ORDERING PARTS.
2) FOR DIFFERENT VOLTAGES OTHER THAN 120/60, REPLACE SOLENOID OPERATOR WITH OPERATOR LISTED IN TABLE BELOW. REFERENCE AY-38L DRAWING FOR REPLACEMENT COILS.

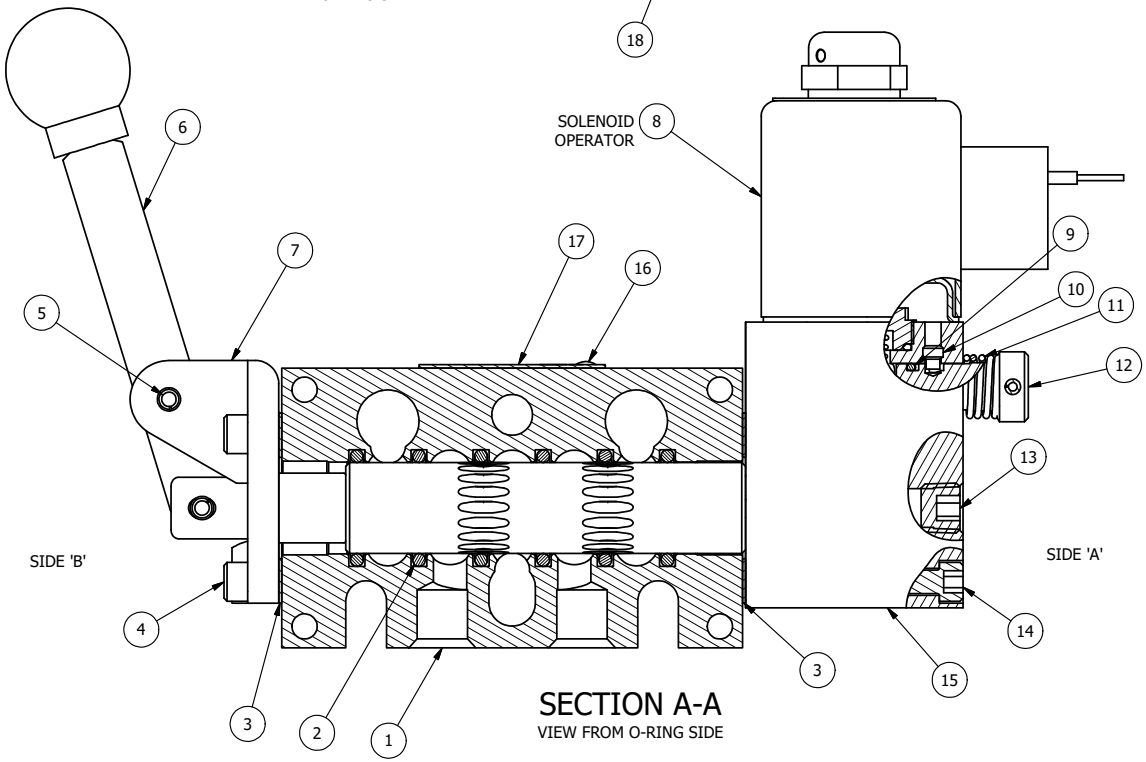


SECTION A-A
VIEW FROM O-RING SIDE

| FLG | QTY | PART NO | DESCRIPTION |
|---|---|---|---|
| 18 | 3 | V-110 | O-RING, BUNA-N, 70 DURO, AS-114, (REF 5/8 X 13/16 X 3/32), 1/4" SLEEVE, 1/2" SUB, STACK |
| 17 | 1 | AN-114 | NAMEPLATE, BLANK, FOR VALVES WITH SPRINGS OR DETENTS |
| 16 | 2 | V-212 | SCREW, #2 X 3/16 DRIVE, TYPE U, OVAL HEAD, STAINLESS STEEL |
| 15 | 1 | AY-BSAH3ON | ASSY - RTRN TO POS A, SOL W/LVR OVRD, 1/4" & 3/8" STACK, NON-LCKNG OVRD |
| 14 | 4 | V-1 | SCREW, 10-24 X 2, SOCKET HEAD CAP |
| 13 | 1 | V-19 | PLUG, SOCKET PIPE 1/8" NPT, 7/8 TAPER, FLUSH SEAL |
| 12 | 1 | OP3-W | OVERRIDE PIN - SPRING RETURN, 1/4" & 3/8" VALVE |
| 11 | 1 | OS3W | SPRING - OVERRIDE RETURN, "CLASSIC" SOLENOID |
| 10 | 1 | V-81 | SCREW, 8-32 X 5/16, SOCKET SET, FULL DOG POINT |
| 9 | 1 | V-85 | O-RING, BUNA-N, 70 DURO, AS-010, (REF 1/4 X 3/8 X 1/16), CLASSIC OVRD |
| 8 | 1 | AY-38L-11 | CLASSIC SOLENOID, 120/60, W/DUST EXCLUDER |
| 7 | 1 | HE3-4 | ENDCAP - HAND OPERATOR, 303 STAINLESS, 1/4" & 3/8" STACK VALVE |
| 6 | 1 | HL3-24 | HAND LEVER WITH KNOB, 1/4" & 3/8" VALVE |
| 5 | 1 | V-542 | PIN, ROLL 3/16 X 1/2 ZINC PLATED STEEL FOR HE3-4 END CAP |
| 4 | 4 | V-162 | SCREW, 10-24 X 5/8, SOCKET HEAD CAP |
| 3 | 2 | ECG3 | GASKET - END CAP, 1/4" & 3/8" VALVE |
| 2 | 6 | V-39 | O-RING, VITON, STD BODY, 1/4" & 3/8" VALVES |
| 1 | 1 | B2-10E | FINISHED - SOLID BODY, UPPER PILOTS, 1/4" STACKING VALVE |

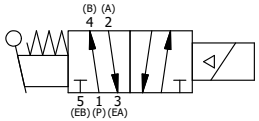


| OPERATOR VOLTAGES | |
|---|---|
| PART NO | REPLACE OPERATOR |
| BSAH2ONL 12VDC | AY-38L-5 |
| BSAH2ONL 24VDC | AY-38L-8 |
| BSAH2ONL 240/60 | AY-38L-17 |

LIMITS ON DIMENSIONS UNLESS OTHERWISE SPECIFIED
2-PL DECIMAL ± .01
3-PL DECIMAL ± .005
FRACTIONAL ± 1/64
ANGULAR ± 1/2'

**AAA PRODUCTS INTERNATIONAL**
7114 Harry Hines Blvd
Dallas, TX 75235

DRAWN: RMcKenna DATE: 5/14/2021
CHECKED: KWaite DATE: 5/14/2021
SCALE: 1 : 1 SHEET: 1 OF 1
RELEASED: HWomack DATE: 5/14/2021

TITLE: 1/4" STACK, SNGL SOL, 2 POS, SPR RTRN, CLASSIC, 120/60, NON-LCK OVRD, EXCLDR, LVR AST

PART NO.: BSAH2ONL

REV.:

THE INFORMATION CONTAINED WITHIN THIS DOCUMENT IS PROPRIETARY TO AAA PRODUCTS AND MAY NOT BE DISCLOSED WITHOUT PRIOR WRITTEN CONSENT

D:\Engineering\Product\Valves\Assembly\Classic\SAD\DWG\BSAH2ONL.dw