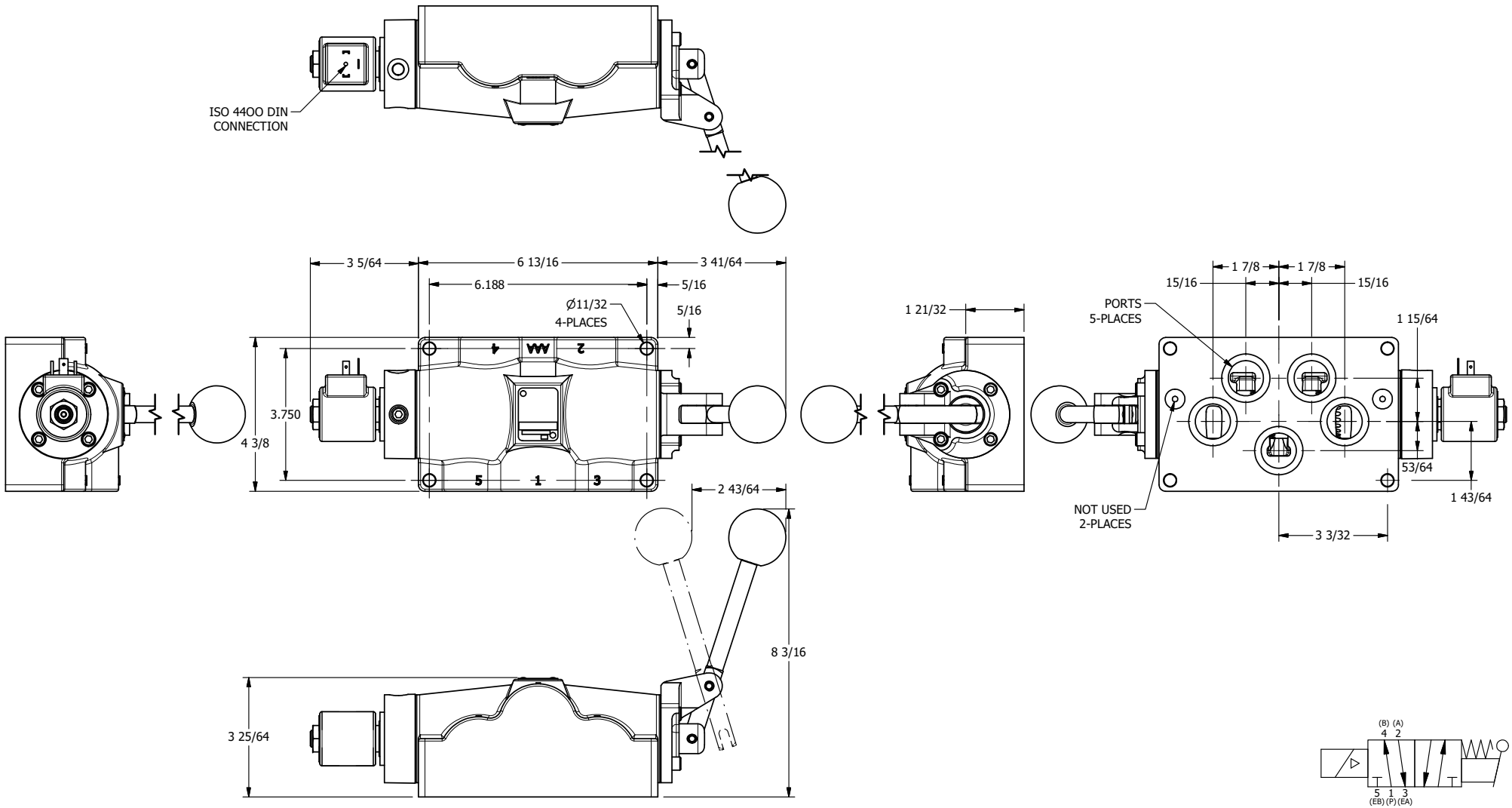

AAA PRODUCTS INTERNATIONAL
7114 Harry Hines Blvd
Dallas, TX 75235

TITLE: 1" SIDE PORT, SNGL SOL, 2 POS, SPR RTRN, SOL SHFT, LEVER ASSIST, ISO 4400 DIN, TAPPED VENT

DRAWING NO.: DIM_SAH8PEDT

THE INFORMATION CONTAINED WITHIN THIS DOCUMENT IS PROPRIETARY TO AAA PRODUCTS AND MAY NOT BE DISCLOSED WITHOUT PRIOR WRITTEN CONSENT