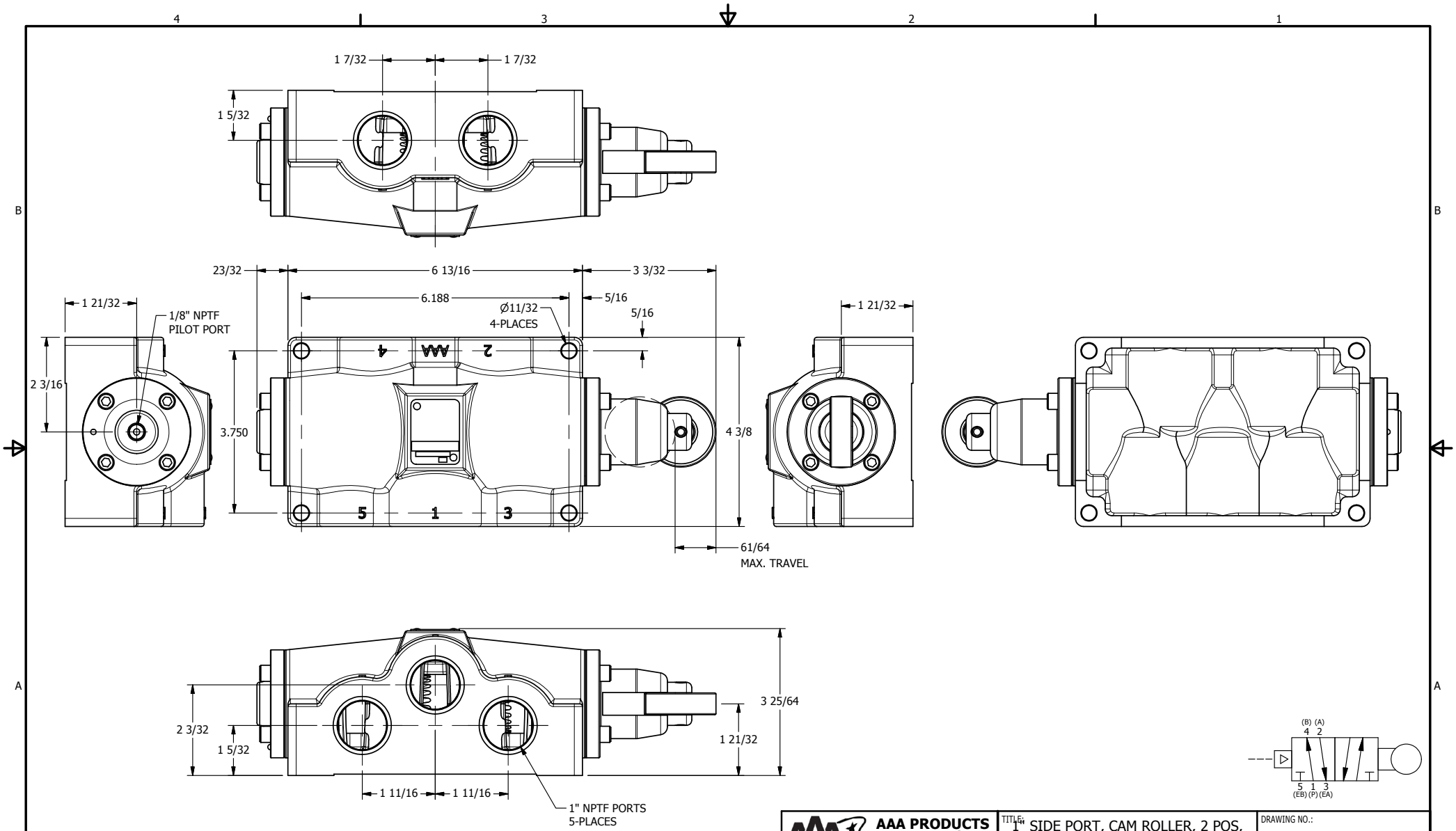


**AAA PRODUCTS INTERNATIONAL**
7114 Harry Hines Blvd
Dallas, TX 75235

TITLE: 1" SIDE PORT, CAM ROLLER, 2 POS, FRICTION POS, PILOT RTRN, ROTATED 90D

DRAWING NO.: DIM_CR8R

THE INFORMATION CONTAINED WITHIN THIS DOCUMENT IS PROPRIETARY TO AAA PRODUCTS AND MAY NOT BE DISCLOSED WITHOUT PRIOR WRITTEN CONSENT